Leica Rugby 610
User Manual

Version 1.0
English

1-877-866-5721
contractors-tools.com
Authorized Leica dealer

- when it has to be **right**

Leica Geosystems

Introduction

Purchase

Congratulations on the purchase of a Leica Rotating Laser product.

This manual contains important safety directions as well as instructions for setting up the product and operating it. Refer to "1 Safety Directions" for further information. Read carefully through the User Manual before you switch on the product.

Product identification

The type and serial number of your product are indicated on the type plate.
Enter the type and serial number in your manual and always refer to this information when you need to contact your agency or Leica Geosystems authorised service workshop.

Type: _____

Serial No.: _____

Validity of this manual

This manual applies to the Rugby 610 lasers. Differences between the models are marked and described.

Available documentation

Name	Description/Format		
Rugby 610 Quick Guide	Provides an overview of the product. Intended as a quick reference guide.	✓	✓
Rugby 610 User Manual	All instructions required in order to operate the product to a basic level are contained in the User Manual. Provides an overview of the product together with technical data and safety directions.	-	✓

Refer to the following resources for all Rugby 610 documentation/software:

- the Leica Rugby CD
- https://myworld.leica-geosystems.com

myWorld@Leica Geosystems (**https://myworld.leica-geosystems.com**) offers a wide range of services, information and training material.

With direct access to myWorld, you are able to access all relevant services whenever it is convenient for you, 24 hours a day, 7 days per week. This increases your efficiency and keeps you and your equipment instantly updated with the latest information from Leica Geosystems.

Service	Description
myProducts	Simply add all Leica Geosystems products that you and your company own. View detailed information on your products, buy additional options or Customer Care Packages (CCPs), update your products with the latest software and keep up-to-date with the latest documentation.
myService	View the service history of your products in Leica Geosystems Service Centers and detailed information on the services performed on your products. For your products that are currently in Leica Geosystems Service Centers view the current service status and the expected end date of service.
mySupport	Create new support requests for your products that will be answered by your local Leica Geosystems Support Team. View the complete history of your Support and view detailed information on each request in case you want to refer to previous support requests.
myTraining	Enhance your product knowledge with the Leica Geosystems Campus - Information, Knowledge, Training. Study the latest online training material or download training material on your products. Keep up-to-date with the latest News on your products and register for Seminars or Courses in your country.

Table of Contents

In this manual

Chapter		Page
1	**Safety Directions**	**6**
1.1	General	6
1.2	Definition of Use	7
1.3	Limits of Use	7
1.4	Responsibilities	7
1.5	Hazards of Use	8
1.6	Laser Classification	10
1.6.1	General	10
1.6.2	Rugby 610	10
1.7	Electromagnetic Compatibility EMC	11
1.8	FCC Statement, Applicable in U.S.	12
2	**Description of the System**	**14**
2.1	System Components	14
2.2	Rugby Laser Components	15
2.3	Case Components	15
2.4	Setup	16
3	**Operation**	**17**
3.1	Buttons	17
3.2	LED Indicators	17
3.3	Turning on and off the Rugby	18
3.4	Automatic Mode	18
3.5	Manual Mode	18
3.6	Elevation Alert (H.I.) Function	19
4	**Receivers**	**20**
4.1	Rod Eye 140, Classic Receiver	20
4.2	Menu - Rod Eye 140, Classic Receiver	21
4.3	Rod Eye Basic Receiver	22
5	**Applications**	**24**
5.1	Setting Forms	24
5.2	Checking Grades	25
5.3	Manual Grades	26
6	**Batteries**	**27**
6.1	Operating Principles	27
6.2	Battery for Rugby	27
7	**Accuracy Adjustment**	**30**
7.1	Checking the Level Accuracy	30
7.2	Adjusting the Level Accuracy	31
8	**Troubleshooting**	**33**
9	**Care and Transport**	**35**
9.1	Transport	35
9.2	Storage	35
9.3	Cleaning and Drying	36

10 Technical Data **37**
10.1 Conformity to National Regulations 37
10.2 General Technical Data of the Laser 37
11 Lifetime Manufacturer's Warranty **39**
12 Accessories **40**
Index **41**

1 Safety Directions

1.1 General

Description

The following directions enable the person responsible for the product, and the person who actually uses the equipment, to anticipate and avoid operational hazards.

The person responsible for the product must ensure that all users understand these directions and adhere to them.

About Warning Messages

Warning messages are an essential part of the safety concept of the instrument. They appear wherever hazards or hazardous situations can occur.

Warning messages...

- make the user alert about direct and indirect hazards concerning the use of the product.
- contain general rules of behaviour.

For the users' safety, all safety instructions and safety messages shall be strictly observed and followed! Therefore, the manual must always be available to all persons performing any tasks described herein.

DANGER, **WARNING**, **CAUTION** and **NOTICE** are standardized signal words for identifying levels of hazards and risks related to personal injury and property damage. For your safety it is important to read and fully understand the table below with the different signal words and their definitions! Supplementary safety information symbols may be placed within a warning message as well as supplementary text.

Type	Description
⚠ **DANGER**	Indicates an imminently hazardous situation which, if not avoided, will result in death or serious injury.
⚠ **WARNING**	Indicates a potentially hazardous situation or an unintended use which, if not avoided, could result in death or serious injury.
⚠ **CAUTION**	Indicates a potentially hazardous situation or an unintended use which, if not avoided, may result in minor or moderate injury.
NOTICE	Indicates a potentially hazardous situation or an unintended use which, if not avoided, may result in appreciable material, financial and environmental damage.
☞	Important paragraphs which must be adhered to in practice as they enable the product to be used in a technically correct and efficient manner.

1.2 Definition of Use

Intended use

- The product casts a horizontal laser plane or a laser beam for the purpose of alignment.
- The laser beam can be detected by means of a laser detector.
- Remote control of product.
- Data communication with external appliances.

Reasonably foreseeable misuse

- Use of the product without instruction.
- Use outside of the intended use and limits.
- Disabling safety systems.
- Removal of hazard notices.
- Opening the product using tools, for example screwdriver, unless this is permitted for certain functions.
- Modification or conversion of the product.
- Use after misappropriation.
- Use of products with recognisable damages or defects.
- Use with accessories from other manufacturers without the prior explicit approval of Leica Geosystems.
- Inadequate safeguards at the working site.
- Deliberate dazzling of third parties.
- Controlling of machines, moving objects or similar monitoring application without additional control- and safety installations.

1.3 Limits of Use

Environment

Suitable for use in an atmosphere appropriate for permanent human habitation: not suitable for use in aggressive or explosive environments.

DANGER

Local safety authorities and safety experts must be contacted before working in hazardous areas, or close to electrical installations or similar situations by the person in charge of the product.

1.4 Responsibilities

Manufacturer of the product

Leica Geosystems AG, CH-9435 Heerbrugg, hereinafter referred to as Leica Geosystems, is responsible for supplying the product, including the user manual and original accessories, in a safe condition.

Person responsible for the product

The person responsible for the product has the following duties:

- To understand the safety instructions on the product and the instructions in the user manual.
- To ensure that it is used in accordance with the instructions.
- To be familiar with local regulations relating to safety and accident prevention.
- To inform Leica Geosystems immediately if the product and the application becomes unsafe.
- To ensure that the national laws, regulations and conditions for the operation of e.g. radio transmitters or lasers are respected.

1.5 Hazards of Use

CAUTION

Watch out for erroneous measurement results if the product has been dropped or has been misused, modified, stored for long periods or transported.

Precautions:

Periodically carry out test measurements and perform the field adjustments indicated in the user manual, particularly after the product has been subjected to abnormal use and before and after important measurements.

DANGER

Because of the risk of electrocution, it is dangerous to use poles and extensions in the vicinity of electrical installations such as power cables or electrical railways.

Precautions:

Keep at a safe distance from electrical installations. If it is essential to work in this environment, first contact the safety authorities responsible for the electrical installations and follow their instructions.

NOTICE

With the remote control of products, it is possible that extraneous targets will be picked out and measured.

Precautions:

When measuring in remote control mode, always check your results for plausibility.

WARNING

If the product is used with accessories, for example masts, staffs, poles, you may increase the risk of being struck by lightning.

Precautions:

Do not use the product in a thunderstorm.

WARNING

Inadequate securing of the working site can lead to dangerous situations, for example in traffic, on building sites, and at industrial installations.

Precautions:

Always ensure that the working site is adequately secured. Adhere to the regulations governing safety and accident prevention and road traffic.

CAUTION

If the accessories used with the product are not properly secured and the product is subjected to mechanical shock, for example blows or falling, the product may be damaged or people can sustain injury.

Precautions:

When setting-up the product, make sure that the accessories are correctly adapted, fitted, secured, and locked in position.

Avoid subjecting the product to mechanical stress.

CAUTION

During the transport, shipping or disposal of batteries it is possible for inappropriate mechanical influences to constitute a fire hazard.

Precautions:

Before shipping the product or disposing of it, discharge the batteries by running the product until they are flat.

When transporting or shipping batteries, the person in charge of the product must ensure that the applicable national and international rules and regulations are observed. Before transportation or shipping contact your local passenger or freight transport company.

WARNING

During dynamic applications, for example stakeout procedures there is a danger of accidents occurring if the user does not pay attention to the environmental conditions around, for example obstacles, excavations or traffic.

Precautions:

The person responsible for the product must make all users fully aware of the existing dangers.

WARNING

If you open the product, either of the following actions may cause you to receive an electric shock.

- Touching live components
- Using the product after incorrect attempts were made to carry out repairs

Precautions:

Do not open the product. Only Leica Geosystems authorised service workshops are entitled to repair these products.

WARNING

If the product is improperly disposed of, the following can happen:

- If polymer parts are burnt, poisonous gases are produced which may impair health.
- If batteries are damaged or are heated strongly, they can explode and cause poisoning, burning, corrosion or environmental contamination.
- By disposing of the product irresponsibly you may enable unauthorised persons to use it in contravention of the regulations, exposing themselves and third parties to the risk of severe injury and rendering the environment liable to contamination.

Precautions:

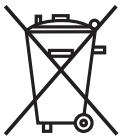

The product must not be disposed with household waste.
Dispose of the product appropriately in accordance with the national regulations in force in your country.
Always prevent access to the product by unauthorised personnel.

Product-specific treatment and waste management information can be downloaded from the Leica Geosystems home page at http://www.leica-geosystems.com/treatment or received from your Leica Geosystems dealer.

WARNING

Only Leica Geosystems authorised service workshops are entitled to repair these products.

WARNING

High mechanical stress, high ambient temperatures or immersion into fluids can cause leakage, fire or explosions of the batteries.

Precautions:

Protect the batteries from mechanical influences and high ambient temperatures. Do not drop or immerse batteries into fluids.

WARNING

If battery terminals are short circuited e.g. by coming in contact with jewellery, keys, metalized paper or other metals, the battery can overheat and cause injury or fire, for example by storing or transporting in pockets.

Precautions:

Make sure that the battery terminals do not come into contact with metallic objects.

1.6 Laser Classification

1.6.1 General

General

The following chapters provide instructions and training information about laser safety according to international standard IEC 60825-1 (2007-03) and technical report IEC TR 60825-14 (2004-02). The information enables the person responsible for the product and the person who actually uses the equipment, to anticipate and avoid operational hazards.

☞ According to IEC TR 60825-14 (2004-02), products classified as laser class 1, class 2 and class 3R do not require:

- laser safety officer involvement,
- protective clothes and eyewear,
- special warning signs in the laser working area

if used and operated as defined in this User Manual due to the low eye hazard level.

☞ National laws and local regulations could impose more stringent instructions for the safe use of lasers than IEC 60825-1 (2007-03) and IEC TR 60825-14 (2004-02).

1.6.2 Rugby 610

General

The rotating laser built into the product produces a visible laser beam which emerges from the rotating head.

The laser product described in this section is classified as laser class 2 in accordance with:

- IEC 60825-1 (2007-03): "Safety of laser products"
- EN 60825-1 (2007-10): "Safety of laser products"

These products are safe for momentary exposures but can be hazardous for deliberate staring into the beam. The beam may cause dazzle, flash-blindness and after-images, particularly under low ambient light conditions.

Rugby 610:

Description	Value
Maximum peak radiant power	2.7 mW ± 5%
Pulse duration (effective)	1.1 ms
Pulse repetition frequency	10 rps
Beam divergence	< 1.5 mrad
Wavelength	635 nm ± 10 nm

⚠ **CAUTION**

From a safety perspective, class 2 laser products are not inherently safe for the eyes.

Precautions:

1) Avoid staring into the beam.
2) Avoid pointing the beam at other people.

Labelling

Laser Radiation
Do not stare into the beam
Class 2 Laser Product
according to IEC 60825-1
(2007 - 03)

Po ≤ 2.70 mW

λ = 635 ± 10 nm

a) Laser beam

1.7 Electromagnetic Compatibility EMC

Description

The term Electromagnetic Compatibility is taken to mean the capability of the product to function smoothly in an environment where electromagnetic radiation and electrostatic discharges are present, and without causing electromagnetic disturbances to other equipment.

WARNING

Electromagnetic radiation can cause disturbances in other equipment.

Although the product meets the strict regulations and standards which are in force in this respect, Leica Geosystems cannot completely exclude the possibility that other equipment may be disturbed.

CAUTION

There is a risk that disturbances may be caused in other equipment if the product is used with accessories from other manufacturers, for example field computers, personal computers or other electronic equipment, non-standard cables or external batteries.
Precautions:
Use only the equipment and accessories recommended by Leica Geosystems. When combined with the product, they meet the strict requirements stipulated by the guidelines and standards. When using computers or other electronic equipment, pay attention to the information about electromagnetic compatibility provided by the manufacturer.

CAUTION

Disturbances caused by electromagnetic radiation can result in erroneous measurements.
Although the product meets the strict regulations and standards which are in force in this respect, Leica Geosystems cannot completely exclude the possibility that the product may be disturbed by intense electromagnetic radiation, for example, near radio transmitters, two-way radios or diesel generators.
Precautions:
Check the plausibility of results obtained under these conditions.

CAUTION

If the product is operated with connecting cables attached at only one of their two ends, for example external supply cables, interface cables, the permitted level of electromagnetic radiation may be exceeded and the correct functioning of other products may be impaired.
Precautions:
While the product is in use, connecting cables, for example product to external battery, product to computer, must be connected at both ends.

Radios or digital cellular phones

Use of product with radio or digital cellular phone devices:

WARNING

Electromagnetic fields can cause disturbances in other equipment, in installations, in medical devices, for example pacemakers or hearing aids and in aircraft. It can also affect humans and animals.

Precautions:

Although the product meets the strict regulations and standards which are in force in this respect, Leica Geosystems cannot completely exclude the possibility that other equipment can be disturbed or that humans or animals can be affected.

- Do not operate the product with radio or digital cellular phone devices in the vicinity of filling stations or chemical installations, or in other areas where an explosion hazard exists.
- Do not operate the product with radio or digital cellular phone devices near to medical equipment.
- Do not operate the product with radio or digital cellular phone devices in aircraft.

1.8 FCC Statement, Applicable in U.S.

The greyed paragraph below is only applicable for products without radio.

WARNING

This equipment has been tested and found to comply with the limits for a Class B digital device, pursuant to part 15 of the FCC rules.
These limits are designed to provide reasonable protection against harmful interference in a residential installation.
This equipment generates, uses and can radiate radio frequency energy and, if not installed and used in accordance with the instructions, may cause harmful interference to radio communications. However, there is no guarantee that interference will not occur in a particular installation.
If this equipment does cause harmful interference to radio or television reception, which can be determined by turning the equipment off and on, the user is encouraged to try to correct the interference by one or more of the following measures:

- Reorient or relocate the receiving antenna.
- Increase the separation between the equipment and the receiver.
- Connect the equipment into an outlet on a circuit different from that to which the receiver is connected.
- Consult the dealer or an experienced radio/TV technician for help.

WARNING

Changes or modifications not expressly approved by Leica Geosystems for compliance could void the user's authority to operate the equipment.

Labelling Rugby 610

Labelling Rod Eye

Rod Eye 140:

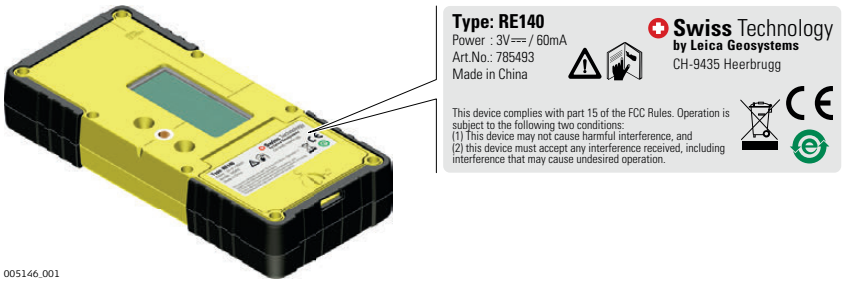

Labelling Rod Eye

Rod Eye Basic:

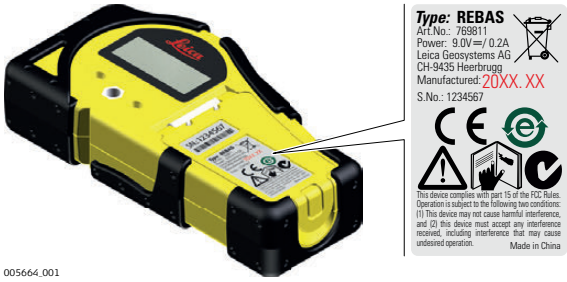

2 Description of the System

2.1 System Components

General description

The Rugby 610 is a laser tool for general construction and levelling applications such as

- Setting forms
- Checking grades
- Controlling depths for excavations

If set up within the self-levelling range, the Rugby automatically levels to create an accurate horizontal plane of laser light.
Once the Rugby has levelled, the head will start rotating and the Rugby is ready for use.
30 seconds after the Rugby has completed the levelling, the H.I. Alert system becomes active and protects the Rugby against changes in elevation caused by movement of the tripod to ensure accurate work.

Available system components

☞ The delivered components depend on the package ordered.

2.2 Rugby Laser Components

Rugby laser components

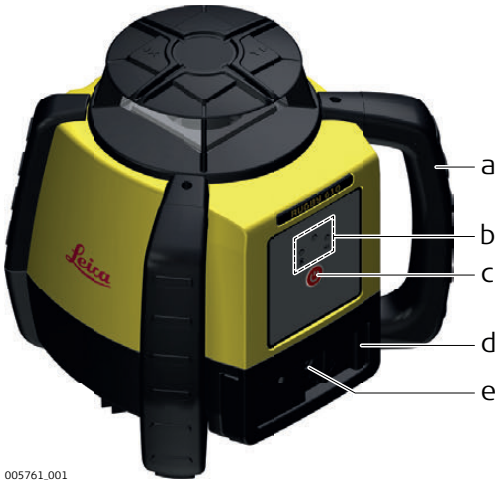

a) Carry Handle
b) LED Indicators
c) Buttons
d) Battery compartment
e) Charge jack (for Li-Ion battery pack)

2.3 Case Components

Case components

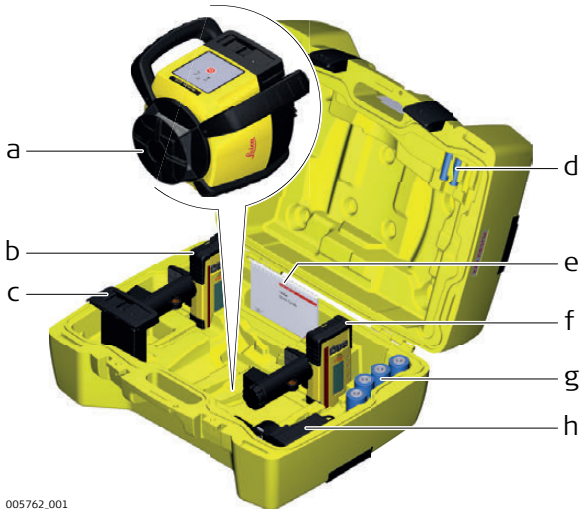

a) Rugby laser
b) Rod Eye receiver mounted on the bracket
c) Li-Ion battery pack or Alkaline battery pack
d) 2x AA-cell battery
e) User Manual/CD
f) Second receiver (can be purchased separately)
g) 4x D-cell battery (for alkaline versions only)
h) Charger (for Li-Ion versions only)

Location

- Keep the location clear of possible obstructions that could block or reflect the laser beam.
- Place the Rugby on a stable ground. Ground vibration and extremely windy conditions can affect the operation of the Rugby.
- When working in a very dusty environment place the Rugby up-wind so the dirt is blown away from the laser.

Setting up on a Tripod

Step	Description
1.	Set up the tripod.
2.	Place the Rugby on the tripod.
3.	Tighten the screw on the underside of the tripod to secure the Rugby on the tripod.

- Attach the Rugby securely to a tripod or laser trailer, or mount on a stable level surface.
- Always check the tripod or laser trailer before attaching the Rugby. Make sure all screws, bolts and nuts are tight.
- If a tripod has chains, they should be slightly loose to allow for thermal expansion during the day.
- Secure the tripod on extremely windy days.

3 Operation

3.1 Buttons

Buttons

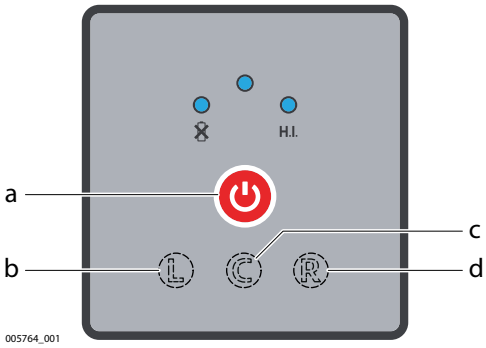

a) Power button
b) Left hidden button
c) Centre hidden button
d) Right hidden button

Description of the Button

Button	Function
Power	Press to turn on or off the Rugby.
	Press and hold for five seconds (five beeps) to turn on Rugby in Manual Mode. The Rugby will first level, then switch to Manual Mode.
Left hidden button, Centre hidden button and Right hidden button	With the Rugby turned on, press and hold the left hidden button and right hidden button. Then press the centre hidden button to enable or disable the Elevation Alert function. The Rugby will beep once to indicate the change.

3.2 LED Indicators

Main Functions

Description

The LED Indicators have three main functions:

- To indicate the level status of the axes.
- To indicate the battery status.
- To indicate an H.I. Alert condition.

Diagram of the LED Indicators

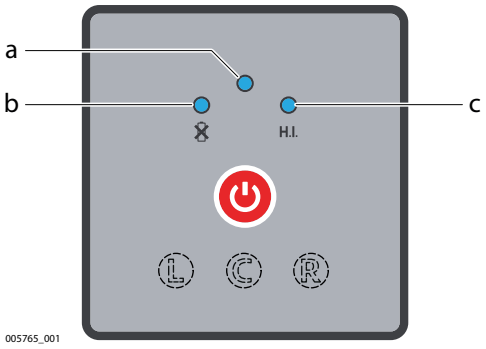

a) Level Indicator LED
b) Low Battery Indicator LED
c) H.I. Indicator LED

Description of the LEDs

IF the	is/are	THEN
Low Battery Indicator LED (Li-Ion & alkaline)	off	the battery is okay.
	on	the battery is getting low.

IF the	is/are	THEN
Level Indicator LED	green	the axis is level.
	flashing green	the axis is levelling.
	red	the axis is in Manual Mode.
H.I. Indicator LED	flashing red rapidly	movement of the laser has triggered an H.I. Alert.

3.3 Turning on and off the Rugby

Turning on and off

Press the Power button to turn on or off the Rugby.

After turning on:

- If set up within the 5° self-levelling range, the Rugby automatically levels to create an accurate horizontal plane of laser light.
- Once levelled, the head starts rotating and Rugby is ready for use.
- After 30 seconds of completing the levelling, the H.I. Alert system becomes active to protect the laser against changes in elevation caused by movement or settling of the tripod.
- The self-levelling system and H.I. Alert function continues to monitor the position of the laser beam to ensure consistent and accurate work.

3.4 Automatic Mode

Description of the Automatic Mode

The Rugby always starts up in Automatic Mode.
In Automatic Mode the Rugby automatically levels if set up within the 5° self-levelling range.

3.5 Manual Mode

Description of the Manual Mode

Manual slopes can be created using the Rugby 610 together with the A240 Manual Slope Adapter (790434).
In Manual Mode the self-levelling will be deactivated.

☞ After turning the Rugby off and on again, the Rugby is in Automatic Mode.

Changing to Manual Mode

Press and hold the Power Button for 5 seconds to change to Manual Mode.

- The Rugby will beep 5 times while holding the Power Button.
- After releasing the button, the Rugby levels. The levelling LED flashes green, then turns solid green for a few seconds.
- After levelling, the levelling LED turns red and the Rugby is in Manual Mode.

3.6 Elevation Alert (H.I.) Function

Description of the Elevation Alert function

- The Elevation Alert or Height of Instrument (H.I.) function prevents incorrect work caused by movement or settling of the tripod that would cause the laser to level at a lower height.
- The Elevation Alert function becomes active and monitors the movement of the laser 30 second after the Rugby has completely levelled and the head of the laser starts rotating.
- The Elevation Alert monitors the laser. If disturbed, the H.I. LED flashes and the Rugby beeps rapidly.
- To stop the alert turn Rugby off and on again. Check the height of the laser before beginning to work again.

☞ The Elevation Alert function turns on automatically every time the Rugby is turned on.

Disable or enable the Elevation Alert function

The Elevation Alert function can be disabled or enabled by pressing the following button combination:

- With the Rugby turned on, press and hold the Left hidden button and the Right hidden button.
- Press the Centre hidden button.

☞ The Rugby beeps once to indicate the change.

☞ If the Elevation Alert function is enabled, the H.I. Indicator LED flashes twice quickly on power up.

4 Receivers

Description

The Rugby 610 is sold with the Rod Eye 140 Classic or Rod Eye Basic Receiver.

4.1 Rod Eye 140, Classic Receiver

Instrument components part 1 of 2

a) Level vial
b) Audio Speaker
c) LCD window
d) LEDs
e) Laser Reception window
f) On-grade
g) Keypad

Component	Description
Level vial	Aids to keep the rod plumb when taking readings.
Audio Speaker	Indicates the detector's position: • High - Fast beeping • On-grade - Solid tone • Low - Slow beeping
LCD window	Front and rear LCD arrow indicate the detector's position.
LEDs	Display the relative position of the laser beam. Three channel indication: • High - Red • On-grade - Green • Low - Blue
Laser Reception window	Detects the laser beam. The reception windows must be directed towards the laser.
On-grade	Indicates the on-grade position of the laser.
Keypad	Power, accuracy and volume functions. Refer to "Description of the Buttons" for detailed information.

Instrument components part 2 of 2

a) Bracket Mounting Hole
b) Offset notch
c) Product label
d) Battery door

Component	Description
Bracket Mounting Hole	Location to attach the receiver bracket for normal operation.
Offset notch	Use to transfer reference marks. The notch is 85 mm (3.35") below to top of the detector.
Product label	The serial number is located inside the battery compartment.
Battery door	Access to the battery compartment.

Description of the Buttons

a) Power
b) Audio
c) Bandwidth

Button	Function
Power	Press once to turn on the Receiver.
Audio	Press to change the audio output.
Bandwidth	Press to change detection bandwidth.

4.2 Menu - Rod Eye 140, Classic Receiver

Menu access and navigation

To access the menu of the Rod Eye 140 Classic Receiver, press the Bandwidth button and Audio button simultaneously.

- Use the Bandwidth button and Audio button to change parameters.
- Use the Power button to scroll through the menu.

Menu

☞ MENU MODE - The blue LED will blink slowly indicating menu mode.

Menu	Function	Indication
LED Red and Green LEDs change brightness to indicate this parameter.	Changes the brightness of the LED indicators.	Red and green LEDs - High/Low/Off
BAT The laser icon flashes to indicate this parameter.	Turns on or off the Laser low battery indication on the receiver.	Green LED is on: Laser low battery icon function is active.
		Red LED is on: Laser low battery icon function is not active.
MEM The down arrow bars are filling to indicate this parameter.	Turns on or off the position memory function.	Green LED is on: function is on.
		Red LED is on: function is off.

Instrument components part 1 of 2

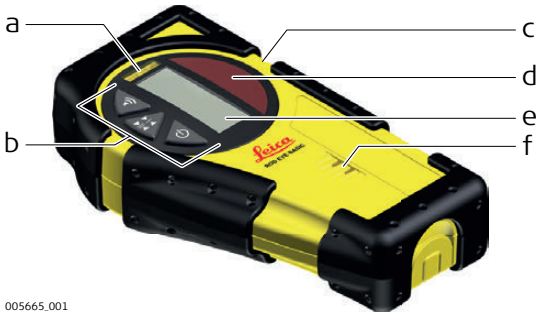

a) Level vial
b) Keypad
c) On-grade
d) Laser Reception window
e) LCD window
f) Audio Speaker

Component	Description
Level vial	Aids to keep the rod plumb when taking readings.
Keypad	Power, accuracy and volume functions. Refer to "Description of the buttons" for detailed information.
On-grade	Indicates the on-grade position of the laser.
Laser Reception window	Detects the laser beam. The reception windows must be directed towards the laser.
LCD window	Front and rear LCD arrow indicate the detector's position.
Audio Speaker	Indicates the detector's position: • High - Fast beeping • On-grade - Solid tone • Low - Slow beeping

Instrument components part 2 of 2

a) Bracket Mounting Hole
b) Offset notch
c) Battery door
d) Serial number label
e) Product label

Component	Description
Bracket Mounting Hole	Location to attach the receiver bracket for normal operation.
Offset notch	Use to transfer reference marks. The notch is 45 mm (1.75") below to top of the detector.
Battery door	Access to the battery compartment.

Description of the buttons

a) Audio
b) Bandwidth
c) Power

Button	Function
Audio	Press to change the audio output.
Bandwidth	Press to change detection bandwidth.
Power	Press once to turn on the Receiver.

Setting Forms step-by-step

Application shown using the Rod Eye 140, Classic Receiver.

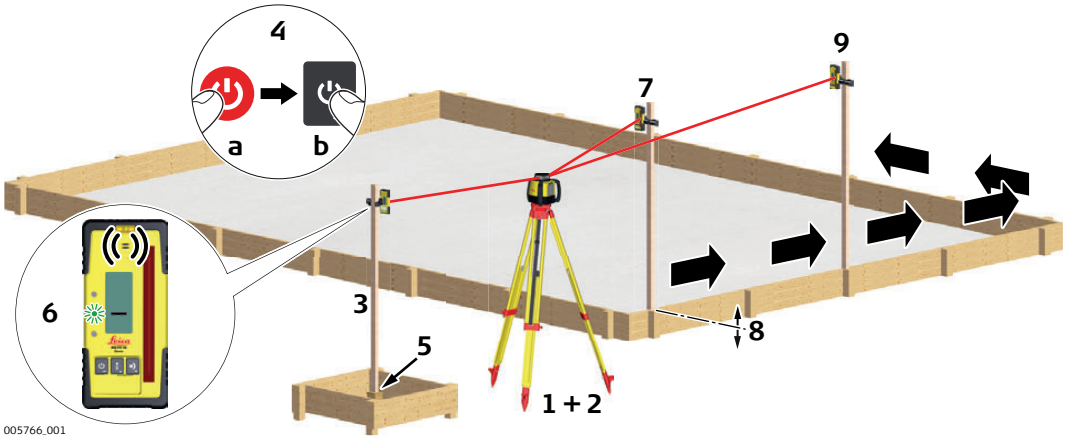

Step	Description
1.	Set up the Rugby on a tripod.
2.	Set up the tripod on a stable surface outside the working area.
3.	Attach the receiver to a rod.
4.	Turn on the Rugby and the receiver.
5.	Set the base of the rod on a known point for the finished height of forms.
6.	Adjust the height of the receiver on the rod until the on-grade (centre-line) position is indicated on the receiver by: • the centre bar • the green flashing LED • a solid audio tone
7.	Set the rod with the attached receiver on top of the form.
8.	Adjust the height of the form until the on-grade position is again indicated.
9.	Continue to additional positions until the forms are levelled to the rotating plane of the Rugby.

Checking Grades step-by-step

Application shown using the Rod Eye 140, Classic Receiver.

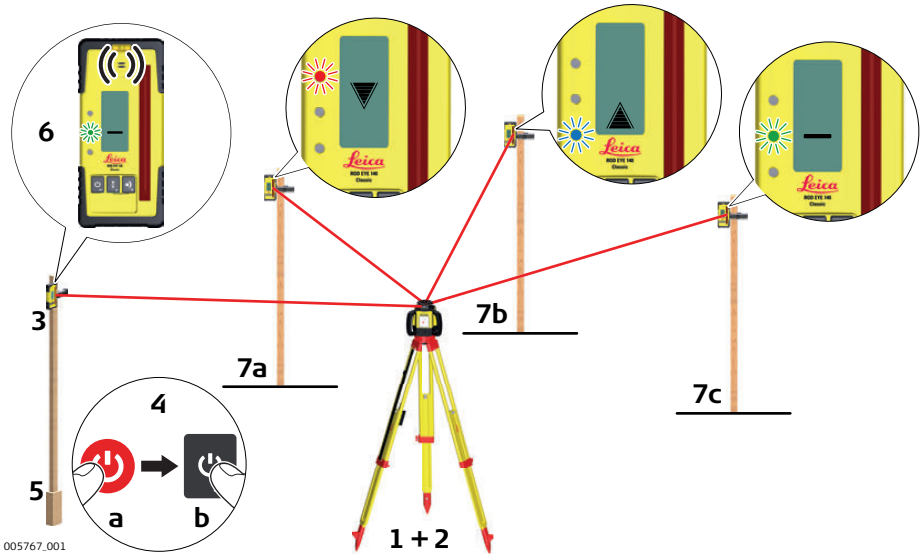

Step	Description
1.	Set up the Rugby on a tripod.
2.	Set up the tripod on a stable surface outside the working area.
3.	Attach the receiver to a rod.
4.	Turn on the Rugby and the receiver.
5.	Set the base of the rod on a known point for the finished grade.
6.	Adjust the height of the receiver on the rod until the on-grade (centre-line) position is indicated on the receiver by: • the centre bar • the green flashing LED • a solid audio tone
7.	Set the rod with the attached receiver on top of the excavation or concrete pour to check for correct elevation.
8.	Variances can be read with the arrow display. • 7a: Position is too high. • 7b: Position is too low. • 7c: Position is on grade.

Manual Grading step-by-step

Application shown using the Rod Eye 140, Classic Receiver.

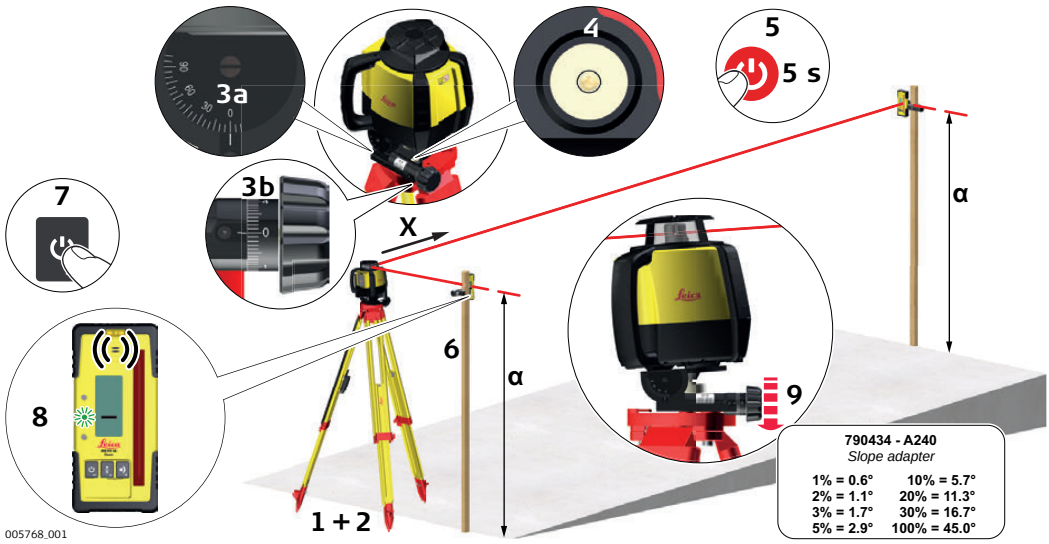

Step	Description
1.	Set up the Rugby and the slope adapter on a tripod.
2.	Set up the tripod at the base of the slope with the Rugby and the slope adaptor pointing in the direction of the desired slope.
3.	Set the slope adapter to the zero position on the bracket and on the knob.
4.	Roughly level the top of the tripod using the circular level on the slope adapter.
5.	Before entering grade in the slope adapter, start the Rugby in Manual Mode: Press and hold the Power Button for 5 seconds to change to Manual Mode. • The Rugby will beep 5 times while holding the Power Button. • After releasing the button, the Rugby levels. The levelling LED flashes green, then turns solid green for a few seconds. • After levelling, the levelling LED turns red and the Rugby is in Manual Mode.
6.	Attach the receiver to a rod.
7.	Turn on the receiver.
8.	At the base of the slope, adjust the height of the receiver on the rod until the on-grade (centre-line) position is indicated on the receiver by: • the centre bar • the green flashing LED • a solid audio tone
9.	The desired slope can be set with the slope adapter.
☞	The receiver can now be used to control the grade of the slope.

6 Batteries

Description

The Rugby 610 can be purchased with alkaline batteries or a rechargeable Li-Ion battery pack.
The following information is appropriate only to the model you have purchased.

6.1 Operating Principles

Charging / first-time use

- The battery must be charged prior to using it for the first time because it is delivered with an energy content as low as possible.
- The permissible temperature range for charging is between 0°C to +40°C/ +32°F to +104°F. For optimal charging, we recommend charging the batteries at a low ambient temperature of +10°C to +20°C/+50°F to +68°F if possible.
- It is normal for the battery to become warm during charging. Using the chargers recommended by Leica Geosystems, it is not possible to charge the battery if the temperature is too high.
- For new batteries or batteries that have been stored for a long time (› three months), it is effectual to make only one charge/discharge cycle.
- For Li-Ion batteries, a single discharging and charging cycle is sufficient. We recommend carrying out the process when the battery capacity indicated on the charger or on a Leica Geosystems product deviates significantly from the actual battery capacity available.

Operation / Discharging

- The batteries can be operated from -20°C to +55°C/-4°F to +131°F.
- Low operating temperatures reduce the capacity that can be drawn; high operating temperatures reduce the service life of the battery.

6.2 Battery for Rugby

Charging the Li-Ion battery pack step-by-step

The rechargeable Li-Ion battery pack on the Rugby can be charged without removing the battery pack from the laser.

Step	Description
1.	Slide the locking mechanism on the battery compartment to the very left to expose the charge jack.
2.	Plug the AC connector into the appropriate AC power source.

Step	Description
3.	Connect the charger plug into the charge jack on the Rugby battery pack.
4.	The small LED next to the charge jack flashes indicating that the Rugby is charging. The LED is on solid when the battery pack is fully charged.
5.	When the battery pack is fully charged, disconnect the charger plug from the charge jack.
6.	Slide the locking mechanism to the centre position to prevent dirt from getting into the charging jack.

☞ The battery pack reaches a full charge in approximately 5 hours if completely empty. A one hour charge should allow the Rugby to run for a full eight hours.

Changing the Li-Ion batteries step-by-step

The Low Battery Indicator LED on the Rugby flashes when the batteries are low and need to be charged.
The charge indicator LED on the Lithium-Ion battery pack indicates when the pack is being charged (flashing slowly) or fully charged (on, not flashing).

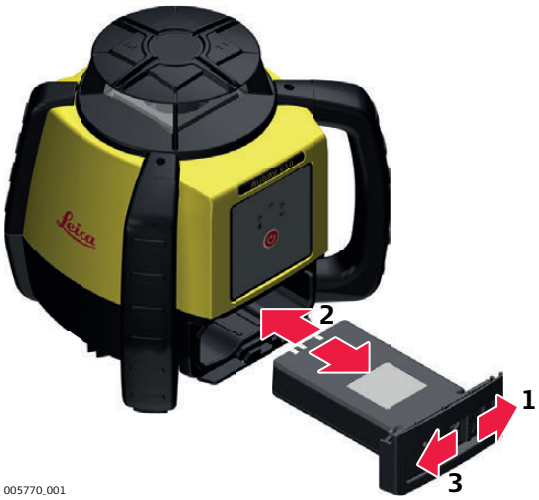

Step	Description
☞	The batteries are inserted in the front of the laser.
☞	The rechargeable battery pack can be recharged without being removed from the laser. Refer to " Charging the Li-Ion battery pack step-by-step" for further information.
1.	Slide the locking mechanism on the battery compartment to the right and open the cover of the battery compartment.
2.	To remove the batteries: Remove the batteries from the battery compartment.
	To insert the batteries: Insert the batteries into the battery compartment.
3.	Close the cover of the battery compartment and slide the locking mechanism to the left centre position until it locks into position.

Changing the alkaline batteries step-by-step

The Low Battery Indicator LED on the Rugby flashes when the batteries are low and need to replaced.

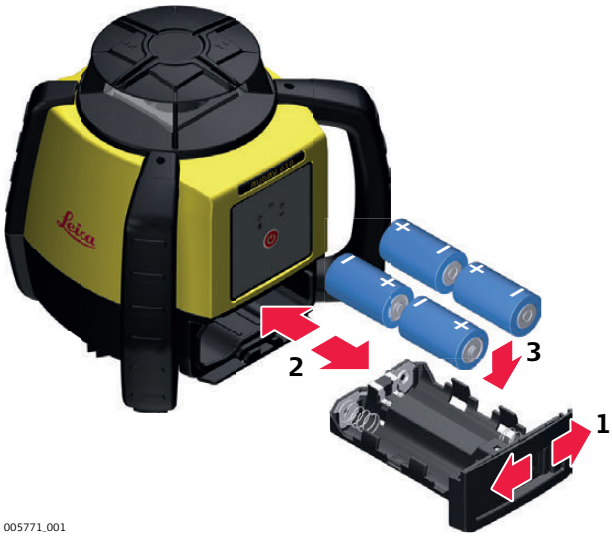

Step	Description
☞	The batteries are inserted in the front of the laser.
1.	Slide the locking mechanism on the battery compartment to the right and open the cover of the battery compartment.
2.	To remove the batteries: Remove the batteries from the battery compartment.
	To insert the batteries: Insert the batteries into the battery compartment, ensuring that the contacts are facing in the right direction. ☞ The correct polarity is displayed on the battery holder.
3.	Close the cover of the battery compartment and slide the locking mechanism to the left until it locks into position.

7 Accuracy Adjustment

About

- It is the responsibility of the user to follow operating instructions and to periodically check the accuracy of the laser and work as it progresses.
- The Rugby is adjusted to the defined accuracy specification at the factory. It is recommended to check the laser for accuracy upon receipt and periodically thereafter to ensure accuracy is maintained. If the laser requires adjustment, contact your nearest authorised service centre or adjust the laser using the procedures described in this chapter.
- Only enter the accuracy adjustment mode when you plan to change the accuracy. Accuracy adjustments should only be performed by a qualified individual that understands basic adjustment principles.
- It is recommended to perform this procedure with two people on a relatively flat surface.

7.1 Checking the Level Accuracy

Checking the level accuracy step-by-step

Step	Description
1.	Place the Rugby on a flat, level surface or tripod approximately 30 m (100 ft) from a wall.
	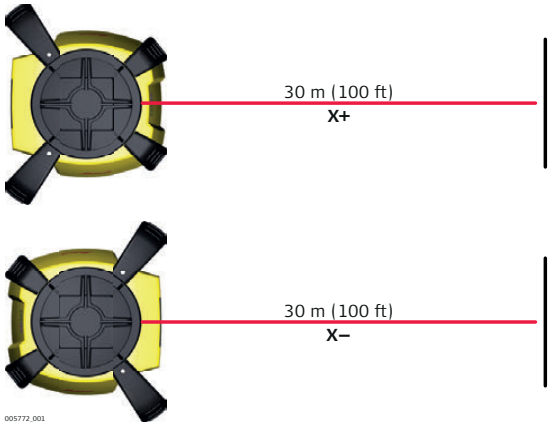
2.	Align the first axis so that it is square to a wall. Allow the Rugby to self-level completely (approximately 1 minute after the Rugby begins to rotate).
3.	Mark the position of the beam.
4.	Rotate the laser 180° and allow it to self-level.
5.	Mark the opposite side of the first axis.
	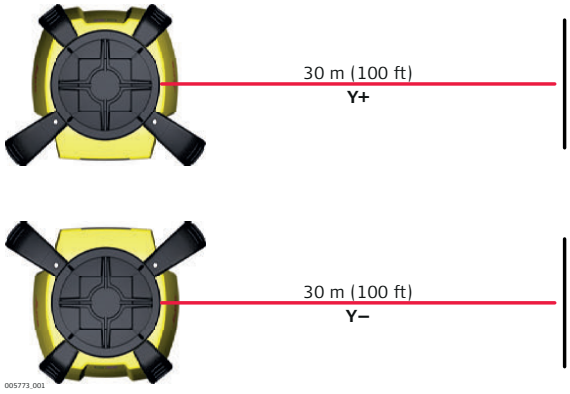
6.	Align the second axis of the Rugby by rotating it 90° so that this axis is square to the wall. Allow the Rugby to self-level completely.

Step	Description
7.	Mark the position of the beam.
8.	Rotate the laser 180° and allow it to self-level.
9.	Mark the opposite side of the second axis.

☞ The Rugby is within its accuracy specification if the four marks are within ± 2.2 mm (± 3/32") from the centre.

7.2 Adjusting the Level Accuracy

Description

In Adjustment Mode the Level Indicator LED indicates changes to the X-axis.

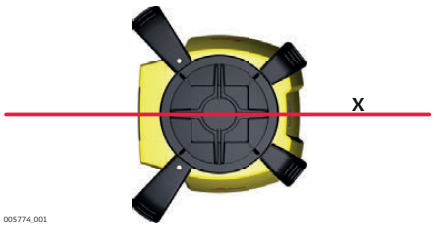

The H.I. Indicator LED indicates changes to the Y-axis.

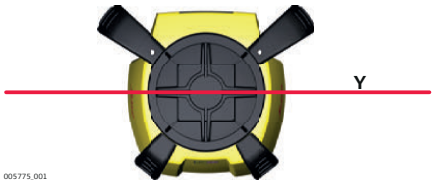

Entering adjustment mode step-by-step

Step	Description
1.	Turn off the power.
2.	Press and hold both the Left hidden button and the Right hidden button. Then press the Power button. The active axis is the X-axis.

The following sequence of LED behaviour occurs:

- The Level Indicator LED and the H.I. Indicator LED flash alternately three times.
- The Level Indicator LED flashes three times, then flashes slowly until level. When the Rugby is level, the Level Indicator LED is on, but does not flash.
- The H.I. Indicator LED is off.

Adjusting the X-axis step-by-step

Step	Description
1.	Press the Left hidden button and Right hidden button to increment the laser beam up and down. Each increment is indicated by a flash of the Level Indicator LED and a beep from the audio indicator.
2.	Continue to press the Left hidden button and the Right hidden button and monitor the spot until the Rugby is within its specified range. ☞ Five steps are equal to 10 arc seconds of change, or approximately 1.5 mm at 30 m (1/16" at 100').
3.	Press the Centre hidden button to switch to the Y-axis.

The following sequence of LED behaviour occurs:

- The Level Indicator LED and the H.I. Indicator LED flash alternately three times.
- The H.I. Indicator LED flashes three times, then flashes slowly until level. When the Rugby is level, the H.I. Indicator LED is on, but does not flash.
- The Level Indicator LED is off.

Adjusting the Y-axis step-by-step

Step	Description
1.	Press the Left hidden button and the Right hidden button to increment the laser beam up and down. Each increment is indicated by a flash of the H.I. Indicator LED and a beep from the audio indicator.
2.	Continue to press the Left hidden button and the Right hidden button and monitor the spot until the Rugby is within its specified range. ☞ Five steps are equal to 10 arc seconds of change, or approximately 1.5 mm at 30 m (1/16" at 100').
3.	Press the Centre hidden button to switch back to the X-axis if desired.

Exiting adjustment mode step-by-step

Press and hold the Centre hidden button for 3 seconds to save and exit Adjustment Mode.
The Level Indicator LED and H.I. Indicator LED flash alternately three times, then the Rugby shuts off.

☞ Pressing the Power button at any time while in Adjustment Mode will exit the mode without saving changes.

Alerts

Alert	Symptom	Possible causes and solutions
	Low Battery LED is on.	The batteries are low. Replace the alkaline batteries or recharge the Li-Ion battery pack. Refer to "6 Batteries".
H.I. + 5 Hz	Elevation (H.I.) Alert The LED flashes quickly with an audio beep.	The Rugby has been bumped or tripod was moved. Turn off Rugby to stop alert check the height of the laser before beginning to work again. Allow Rugby to re-level and check the height of the laser. After two minutes in the alert condition, the unit will shut off automatically.
H.I.	Servo Limit Alert All LEDs flash sequentially.	The Rugby is tipped too far to reach a level position. Re-level the Rugby within the 5 degree self-levelling range. This alert will also be displayed any time the unit is tipped more than 45° from level. After two minutes in the alert condition, the unit will shut off automatically.

Troubleshooting

Problem	Possible Cause(s)	Suggested Solutions
Rugby does not turn on.	The batteries are low or dead.	Check the batteries and change or charge the batteries if necessary. If the problem continues, return the Rugby to an authorised service centre for service.
The distance of the laser is reduced.	Dirt is reducing the laser output.	Clean the windows of the Rugby and the receiver. If the problem continues, return the Rugby to an authorised service centre for service.
The laser receiver is not working properly.	The Rugby is not rotating. It may be levelling or in Elevation Alert.	Check for proper operation of the Rugby. ☞ Refer to the receiver manual for more information.
	The receiver is out of usable range.	Move closer to the Rugby.
	The batteries of the receiver are low.	Change the receiver batteries.

Problem	Possible Cause(s)	Suggested Solutions
Elevation Alert function is not working.	The Elevation Alert function is disabled.	The Elevation Alert function is enabled or disabled by pressing the following button combination: With Rugby turned on and rotating, press and hold the Left hidden button and the Right hidden button. Then press the Centre hidden button to enable or disable the Elevation Alert function. The Rugby beeps once to indicate the change.

9 Care and Transport

9.1 Transport

Transport in the field

When transporting the equipment in the field, always make sure that you
- either carry the product in its original transport container,
- or carry the tripod with its legs splayed across your shoulder, keeping the attached product upright.

Transport in a road vehicle

Never carry the product loose in a road vehicle, as it can be affected by shock and vibration. Always carry the product in its transport container and secure it.

Shipping

When transporting the product by rail, air or sea, always use the complete original Leica Geosystems packaging, transport container and cardboard box, or its equivalent, to protect against shock and vibration.

Shipping, transport of batteries

When transporting or shipping batteries, the person in charge of the product must ensure that the applicable national and international rules and regulations are observed. Before transportation or shipping, contact your local passenger or freight transport company.

Field adjustment

Periodically carry out test measurements and perform the field adjustments indicated in the User Manual, particularly after the product has been dropped, stored for long periods or transported.

9.2 Storage

Product

Respect the temperature limits when storing the equipment, particularly in summer if the equipment is inside a vehicle. Refer to "Technical Data" for information about temperature limits.

Field adjustment

After long periods of storage inspect the field adjustment parameters given in this user manual before using the product.

Li-Ion and alkaline batteries

For Li-Ion and alkaline batteries
- Refer to "Technical Data" for information about storage temperature range.
- Remove batteries from the product and the charger before storing.
- After storage recharge batteries before using.
- Protect batteries from damp and wetness. Wet or damp batteries must be dried before storing or use.

For Li-Ion batteries
- A storage temperature range of -20°C to +30°C/-4°F to 86°F in a dry environment is recommended to minimise self-discharging of the battery.
- At the recommended storage temperature range, batteries containing a 50% to 100% charge can be stored for up to one year. After this storage period the batteries must be recharged.

9.3 Cleaning and Drying

Product and accessories

- Blow dust off lenses and prisms.
- Never touch the glass with your fingers.
- Use only a clean, soft, lint-free cloth for cleaning. If necessary, moisten the cloth with water or pure alcohol. Do not use other liquids; these can attack the polymer components.

Damp products

Dry the product, the transport container, the foam inserts and the accessories at a temperature not greater than 40°C / 104°F and clean them. Remove the battery cover and dry the battery compartment. Do not repack until everything is completely dry. Always close the transport container when using in the field.

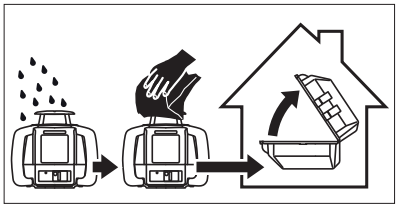

Cables and plugs

Keep plugs clean and dry. Blow away any dirt lodged in the plugs of the connecting cables.

10 Technical Data

10.1 Conformity to National Regulations

Conformity to national regulations

For products which do not fall under R&TTE directive:

Hereby, Leica Geosystems AG, declares that the product/s is/are in compliance with the essential requirements and other relevant provisions of the applicable European Directives. The declaration of conformity can be consulted at http://www.leica-geosystems.com/ce.

10.2 General Technical Data of the Laser

Operating range

Rugby 610 operating range (diameter):

With Rod Eye 140, Classic Receiver:	600 m/1,970 ft
With Rod Eye Basic Receiver:	500 m/1,600 ft

Self-levelling accuracy

Self-levelling accuracy:	±2.2 mm at 30 m (±3/32" at 100 ft)

Self-levelling accuracy is defined at 25°C (77°F)

Self-levelling range

Self-levelling range:	±5°

Rotation speed

Rotation speed:	10 rps

Laser Dimensions

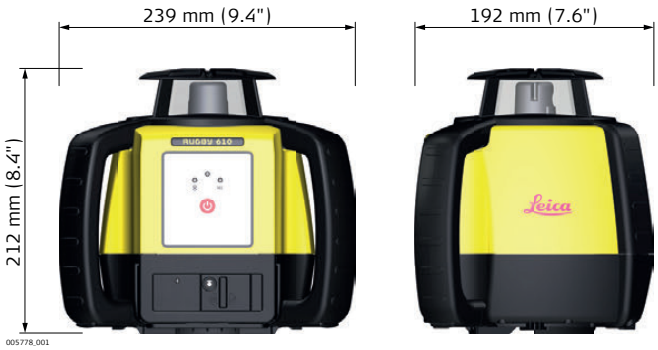

Weight

Rugby 610 weight with battery:	2.38 kg/5.2 lbs.

Internal battery

Type	Operating times* at 20°C
A600 Lithium-Ion (Li-Ion Pack)	40 h
Alkaline (four D-cells)	60 h

*Operating times are dependent upon environmental conditions.

☞ Charging the Li-Ion battery pack takes a maximum of five hours.

☞ Use only high quality alkaline batteries to achieve operating time.

Environmental specifications

Temperature

Operating temperature	Storage temperature
-10°C to +50°C (+14°F to +122°F)	-20°C to +70°C (-4°F to +158°F)

Protection against water, dust and sand

Protection
IPX7 (IEC 60529)
Dust tight Protected against continuous immersion in water.

A100 Lithium-Ion charger

Type:	Li-Ion battery charger
Input voltage:	100 V AC-240 V AC, 50 Hz-60 Hz
Output voltage:	12 V DC
Output current:	3.0 A
Polarity:	Shaft: negative, Tip: positive

A600 Lithium-Ion battery pack

Type:	Li-Ion battery pack
Input voltage:	12 V DC
Input current:	2.5 A
Charge time:	5 hours (maximum) at 20°C

11 Lifetime Manufacturer's Warranty

Description

Lifetime Manufacturer's Warranty

Warranty coverage for the entire usage time of the product. Free charge repair or replacement for all products that suffer defects as a result of faults in materials or manufacturing, for the entire life of the product.

Three Years No Costs

Guaranteed service should the product become defective and require servicing under normal conditions of use, as described in the user manual, at no additional charge.

To receive the "three years no cost" period, the product must be registered at http://www.leica-geosystems.com/registration within 8 weeks of the purchase date. If the product is not registered, a two year warranty applies.

Accessories for power supply

A100 - Li-Ion Charger (790417)
The A100 Li-Ion charger comes complete with four separate AC adaptors.

A130 - 12 Volt Battery Cable (790418)
The A130 12 volt battery cable connects the Rugby to a standard 12 volt automotive battery as a backup for the unit's battery. It is only usable with the rechargeable battery pack. Length: 4 metres/13 feet.

A140 - Car Adapter Cable (797750)
The A140 car adapter cable connects the Rugby to a standard automotive accessory jack as a backup for the unit's battery or to charge in a vehicle. It is only usable with a rechargeable battery pack. Length: 2 metres/6.5 feet.

A150 - Alkaline Battery Pack (790419)
The A150 alkaline battery pack is included as part of the standard alkaline package. It can also be purchased separately to be used as a backup for rechargeable models. Batteries required: Four D-cell type alkaline.

A240 - Manual Slope Adapter(790434)
The A240 Slope Adapter allows the user to quickly enter grades with the Rugby set to Manual Mode.

A600 - Li-Ion Battery Pack (790415)
The A600 Li-Ion battery pack is included as part of the standard rechargeable package. It can also be purchased separately as an upgrade to the alkaline battery pack. It is necessary to also purchase the A100, Li-Ion battery charger to complete the Li-Ion battery solution.

Index

A

Accessories 40
Accuracy
  Self-levelling 37
Accuracy Adjustment 30
Adjust
  Level Accuracy 31
Applications
  Checking Grades 25
  Manual Grades 26
  Setting Forms 24
Automatic Mode 18

B

Batteries
  Charging, first-time use 27
  Operation, Discharging 27
Battery
  Change alkaline batteries 29
  Change Li-Ion battery pack 28
  Charge 27
  Technical data 37
Battery Charger
  Technical data 38
Battery Pack
  Technical data 38
Buttons 17

C

Classic Receiver 20

D

Definition of Use 7
Description of the system 14
Dimensions
  Of laser 37
Documentation 2

E

Elevation alert 19
Environmental specifications
  Laser 38

F

FCC Statement 12

I

Indicators, LED
  Level status 17
Instrument
  Technical Data 37
  Turn on and off 18
Intended use 7

L

Laser
  Classification 10
  Dimensions 37
Laser Classification
  Rugby 10
LED Indicators 17
Level Accuracy
  Adjust 31
  Check 30
Li-Ion battery 38
  Storage 35

M

Manual mode 18, 18
Menu
  Rod Eye 21

O

Operating range 37

R

Range
  Self-levelling 37
Responsibilities 7
Rod Eye
  Instrument components 20, 22
  Menu 21
Rotation speed 37

S

Safety Directions 6
Setup
  Instrument on tripod 16
Specifications, environmental
  Instrument 38

T

Temperature
Laser
Operating 38
Storage 38
Temperature, charging internal battery 27
Troubleshooting 33

U

User Manual
Validity of 2

W

Warranty 39
Weight
Instrument 37

812929-1.0.0en
Original text
Published in Switzerland
© 2013 Leica Geosystems AG, Heerbrugg, Switzerland

Leica Geosystems AG
Heinrich-Wild-Strasse
CH-9435 Heerbrugg
Switzerland
Phone +41 71 727 31 31
www.leica-geosystems.com

- when it has to be **right**