CONTRACTORS-TOOLS.COM
SURVEY EQUIPMENT AND SUPPLIES

AUTHORIZED TOPCON DISTRIBUTOR

TP-L6 series pipe laser

Manufacturer documentation

Sold, shipped and supported by Contractors-Tools.com
Family owned and operated | Free shipping | Same-day shipping
Real people who set these up - not a call centre

1-877-866-5721

Contractors-Tools.com

Experience the value of Great Customer Service!

Contractors-Tools.com | 1-877-866-5721

TOPCON

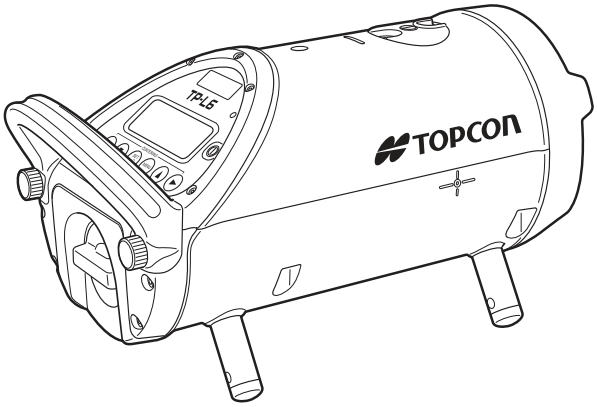

INSTRUCTION MANUAL
PIPE LASER

TP-L6 series

TP-L6WGV
TP-L6WG
TP-L6WBG

TP-L6WAV
TP-L6WA
TP-L6WB

1036869-01-A

HOW TO READ THIS MANUAL

Thank you for selecting the TOPCON instrument.

- Please read this instruction manual carefully before using this instrument.
- The specifications and general appearance of the instrument are subject to change without prior notice and without obligation by Topcon Corporation and may differ from those appearing in this manual.
- Some of the diagrams shown in this manual may be simplified for easier understanding.

Symbols

The following conventions are used in this manual.

: Indicates precautions and important items which should be read before operations.

☞ : Indicates the chapter title to refer to for additional information.

Note : Indicates supplementary explanation.

[Menu mode] etc. :Indicates operation keys and selection items on the screen.

Notes regarding manual style

- Except where stated, "TP-L6W" means TP-L6WGV/WG/WBG/WAV/WA/WB in this manual.
- The specifications by the model are as follows.

Model	Laser	Upper/Lower Laser	Centerline LED	Auto alignment ☞" Automatic alignment with the target (TP-L6WGV/WG/WAV/WA only)"
TP-L6WGV	Green	○	---	○
TP-L6WG		---	○	○
TP-L6WBG		---	○	---
TP-L6WAV	Red	○	---	○
TP-L6WA		---	○	○
TP-L6WB		---	○	---

- Bluetooth® is a registered trademark of Bluetooth SIG, Inc.
- All other company and product names featured in this manual are trademarks or registered trademarks of each respective organization.

Li-ion CONTAINS Li-ion BATTERY.
MUST BE RECYCLED OR DISPOSED OF PROPERLY.

JSIMA This is the mark of the Japan Surveying Instruments Manufacturers Association.

CONTENTS

1. PRECAUTIONS FOR SAFE OPERATION 1
2. PRECAUTIONS 4
3. LASER SAFETY INFORMATION 8
4. PRODUCT OUTLINE 10
   4.1 Parts and Functions of the Instrument 10
      ■ Control panel 11
      ■ Menu mode 12
      ■ How to change menu items 13
      ■ Key Operation (When the instrument is locked) 13
      ■ Indicators 14
      ■ Warning indications 15
5. USING THE BATTERY 17
   5.1 Battery Charging 17
   5.2 Installing the Battery 18
6. BASIC OPERATION 20
   6.1 Setting up the Instrument 20
   6.2 Grade setting procedure 20
      ■ Direct entry of grade value 20
      ■ Set grade value by moving laser 21
   6.3 Setting Laser Line 22
      ■ Automatic Centering 23
      ■ Automatic alignment with the target (TP-L6WGV/WG/WAV/WA only) 24
   6.4 Setting Centerline LED/Setting Laser 26
      ■ Setting ON/OFF of Upper/Lower laser and Centerline LED 26
      ■ Setting Upper/Lower laser and Centerline LED automatic power off 27
      ■ Changing the laser mode (ON/Blinking/Energy-saving) 28
   6.5 Setting Display Method 29
   6.6 Setting Bluetooth Connection 32
      ■ Performing pairing with smartphone 33
      ■ Connecting to smartphone 34
      ■ Checking the Bluetooth address 34
7. SETTING SECURITY CODE 36
   7.1 Setting ON/OFF of Security Mode 37
   7.2 Changing Security Code 38
   7.3 Changing Company Name 39
8. STANDARD ACCESSORIES 42
   8.1 Self-centering Feet 42
   8.2 Remote Controller (RC-500) 43
      ■ Replacing battery for Remote Controller RC-500 44
   8.3 Target 45
9. CHECKS AND ADJUSTMENTS 46
   9.1 Procedure To Check and Adjust Laser Calibration 46
      ■ Checking Calibration 46
      ■ Adjusting Calibration 46
   9.2 Checking of Upper/Lower Laser (TP-L6WGV/WAV only) 48
10. ERROR DISPLAYS 49
11. TROUBLESHOOTING 50
12. OPTIONAL ACCESSORIES 52
13. SPECIFICATIONS 53
14. REGULATIONS 55

1. PRECAUTIONS FOR SAFE OPERATION

For the safe use of the product and prevention of injury to operators and other persons as well as prevention of property damage, items which should be observed are indicated by an exclamation point within a triangle used with WARNING and CAUTION statements in this instruction manual.
The definitions of the indications are listed below. Be sure you understand them before reading the manual's main text.

Definition of Indication

⚠	**WARNING**	Ignoring this indication and making an operation error could possibly result in death or serious injury to the operator.
⚠	**CAUTION**	Ignoring this indication and making an operation error could possibly result in personal injury or property damage.

△ This symbol indicates items for which caution (hazard warnings inclusive) is urged. Specific details are printed in or near the symbol.

⃠ This symbol indicates items which are prohibited. Specific details are printed in or near the symbol.

● This symbol indicates items which must always be performed. Specific details are printed in or near the symbol.

General

Warning

Do not use the unit in areas exposed to high amounts of dust or ash, in areas where there is inadequate ventilation, or near combustible materials. An explosion could occur.

Do not perform disassembly or rebuilding. Fire, electric shock, burns or hazardous radiation exposure could result.

When securing the instrument in the carrying case make sure that all catches, including the side catches, are closed. Failure to do so could result in the instrument falling out while being carried, causing injury.

Caution

Do not use the carrying case as a footstool. The case is slippery and unstable so a person could slip and fall off it.

Do not place the instrument in a damaged or in a case with a damaged belt. The case or instrument could be dropped and cause injury.

Secure handle to main unit. Failure to properly secure the handle could result in the unit falling off while being carried, causing injury.

Power Supply

Warning

Do not disassemble or rebuild the battery or the charger, nor expose to heavy shocks or vibration. Sparking, fire, electric shock or burns could result.

Do not short circuit. Heat or ignition could result.

Do not place articles such as clothing on the battery charger while charging batteries. Sparks could be induced, leading to fire.

- Do not use voltage other than the specified power supply voltage. Fire or electrical shock could result.
- Do not use batteries other than those designated. An explosion could occur, or abnormal heat generated, leading to fire.
- Do not use damaged power cords, plugs or loose outlets. Fire or electric shock could result.
- Do not use power cords other than those designated. Fire could result.
- Use only the specified battery charger to recharge batteries. Other chargers may be of different voltage rating or polarity, causing sparking which could lead to fire or burns.
- Do not use the battery or charger for any other equipment or purpose. Fire or burns caused by ignition could result.
- Do not heat or throw batteries or chargers into fire. An explosion could occur, resulting in injury.
- To prevent shorting of the battery in storage, apply insulating tape or equivalent to the terminals. Otherwise shorting could occur, resulting in fire or burns.
- Do not use the battery or battery charger if its terminals are wet. Resultant poor contact or shorting could lead to fire or burns.
- Do not connect or disconnect power supply plugs with wet hands. Electric shock could result.

Caution

- Do not touch liquid leaking from batteries. Harmful chemicals could cause burns or blisters.

Tripod

Caution

- When mounting the instrument to the tripod, tighten the centering screw securely. Failure to tighten the screw properly could result in the instrument falling off the tripod, causing injury.
- Tighten securely the leg fixing screws of the tripod on which the instrument is mounted. Failure to tighten the screws could result in the tripod collapsing, causing injury.
- Do not carry the tripod with the tripod shoes pointed at other persons. A person could be injured if struck by the tripod shoes.
- Keep hands and feet away from the tripod shoes when fixing the tripod in the ground. A hand or foot stab wound could result.
- Tighten the leg fixing screws securely before carrying the tripod. Failure to tighten the screws could lead to the tripod legs extending, causing injury.

Bluetooth wireless technology

Warning

Do not use within the vicinity of hospitals. Malfunction of medical equipment could result.

Use the instrument at a distance of at least 22 cm from anyone with a cardiac pacemaker. Otherwise, the pacemaker may be adversely affected by the electromagnetic waves produced and cease to operate as normal.

Do not use onboard aircraft. The aircraft instrumentation may malfunction as a result.

Do not use within the vicinity of automatic doors, fire alarms and other devices with automatic controls as the electromagnetic waves produced may adversely affect operation resulting in an accident.

2. PRECAUTIONS

Before starting work or operation, be sure to check that the instrument is functioning correctly with normal performance.

Charging Battery

- Be sure to charge the battery within the charging temperature range.
  Charging temperature range: 10 to 40°C
- Use only the specified battery and the battery charger. Failures caused by using other batteries and battery chargers are out of warranty including the main unit.
  (Battery:BDC72 Charger:CDC77)

Warranty policy for Battery

- Battery is an expendable item. The decline in retained capacity depending on the repeated charging/discharging cycle is out of warranty.

Vibration and Impact Protection

- When transporting the instrument, provide protection to minimize risk of severe vibration or impact. Severe vibration or impacts may affect beam accuracy.

Sudden changes of temperature

- A sudden change in temperature may cause water condensation on the glass used for the laser emission part. In such a case, let the instrument stand for a while to allow it to adjust to the temperature prior to actual use.

Storage precautions

- When storing the instrument, keep it in a place not exposed to direct sunlight and at the temperature range from -30 to 60°C.
- Do not store the wet instrument in the carrying case. If any part of the instrument is wet, thoroughly wipe off with soft cloth and leave it dry before storing in the carrying case.

Battery

- The battery is not charged when the instrument is shipped. Make sure to charge it fully before use.
- If the battery is over-discharged, it may make re-charging impossible or shorten the running time. Store the battery when it is fully charged.
- Even if the instrument is not used for a long period, charge the battery at least once per 3 to 6 months to maintain the performance of the battery.
- If the battery's running time shortens after using it for a certain period, contact your local dealer.

Maintenance

- Wipe off moisture completely if the instrument gets wet during survey work.
- Wipe away stain or dirt with soft cloth after dusting.
- Clean storage case using cloth moistened with neutral detergent or water. Do not use ether, benzene, thinner or other solvents.
- To clean the instrument or the carrying case, lightly moisten a soft cloth in a mild detergent solution. Wring out excess water until the cloth is slightly damp, then carefully wipe the surface of the unit. Do not use any alkaline cleaning solutions, alcohol, or any other organic solvents on the instrument or display.
- When removing the instrument from the carrying case, never pull it out by force. The empty carrying case should be closed to protect it from moisture.
- Check the tripod for loose fit and loose screws.
- Check the instrument for proper adjustment periodically to maintain the instrument accuracy.

Precautions concerning water and dust resistance

The instrument conforms to IPX8 specifications for waterproofing and dust resistance when battery holder connector cap and the external interface hatch are closed.

- Close the battery holder securely.
- Make sure that moisture or dust particles do not come in contact with the terminal or connectors. Operating the instrument with moisture or dust on the terminal or connectors may cause damage to the instrument.
- Make sure that the inside of the carrying case and the instrument are dry before closing the case. If moisture is trapped inside the case, it may cause the instrument to rust.
- If there is a crack or deformation in the rubber packing for the battery holder, stop using and replace the packing.
- To retain the waterproof property, it is recommended that you replace the rubber packing once every two years. To replace the packing, contact your local dealer.

Bluetooth Wireless Technology

- *Bluetooth* function may not be built in depending on telecommunications regulations of the country or the area where the instrument is purchased. Contact your local dealer for the details.
- Use of this technology must be authorized according to telecommunications regulations of the country where the instrument is being used. Contact your local dealer in advance.
  ☞ "14. REGULATIONS"
- TOPCON CORPORATION is not liable for the content of any transmission nor any content related thereto. When communicating important data, run tests beforehand to ascertain that communication is operating normally.
- Do not divulge the content of any transmission to any third party.

Radio interference when using *Bluetooth* technology

Bluetooth communication with the TP-L6W uses the 2.4 GHz frequency band. This is the same band used by the devices described below. As a result, using the TP-L6W within proximity to the above devices may result in interference causing communication failure or reduction of transmission speed.

- Industrial, scientific, and medical (ISM) equipment such as microwaves and pacemakers.
- portable premises radio equipment (license required) used in factory production lines etc.
- portable specified low-power radio equipment (license-exempt)
- IEEE802.11b/IEEE802.11g standard wireless LAN devices

The above devices use the same frequency band as *Bluetooth* communications. As a result, using theTP-L6W within proximity to the above devices may result in interference causing communication failure or reduction of transmission speed.

Although a radio station license is not required for this instrument, bear in mind the following points when using *Bluetooth* technology for communication.

● Do not use the TP-L6W in proximity to microwaves.

- Microwave ovens can cause significant interference resulting in communication failure. Perform communication at a distance of 3m or more from microwave ovens.

● Regarding portable premises radio equipment and portable specified low-power radio equipment:

- Before starting transmission, check that operation will not take place within the vicinity of portable premises radio equipment or specified low-power radio equipment.
- In the case that the instrument causes radio interference with portable premises radio equipment, terminate the connection immediately and take measures to prevent further interference (e.g. connect using an interface cable).
- In the case that the instrument causes radio interference with portable specified low-power radio equipment, contact your local dealer.

- When using *Bluetooth* function in proximity to IEEE802.11b or IEEE802.11g standard wireless LAN devices, turn off all devices not being used.
  - Interference may result, causing transmission speed to slow or even disrupting the connection completely. Turn off all devices not being used and vice versa.
- Refrain from using the TP-L6W in proximity to televisions and radios.
  - Televisions and radios use a different frequency band to *Bluetooth* communications.
    However, even if the TP-L6W is used within proximity to the above equipment with no adverse effects with regard to *Bluetooth* communication, moving a *Bluetooth* compatible device (including the TP-L6W) closer to said equipment may result in electronic noise in sound or images, adversely affecting the performance of televisions and radios.

Precautions regarding transmission

- For best results
  - The usable range becomes shorter when obstacles block the line of sight, or devices such as PDAs or computers are used. Wood, glass and plastic will not impede communication but the usable range becomes shorter. Moreover, wood, glass and plastic containing metal frames, plates, foil and other heat shielding elements as well as coatings containing metallic powders may adversely affect wireless communication and concrete, reinforced concrete, and metal will render it impossible.
  - Use a vinyl or plastic cover to protect the instrument from rain and moisture. Metallic materials should not be used.
- Reduced range due to atmospheric conditions
  - The radio waves used by the TP-L6W may be absorbed or scattered by rain, fog, and moisture from the human body with the limit of usable range becoming lower as a result. Similarly, usable range may also shorten when performing communication in wooded areas. Moreover, as wireless devices lose signal strength when close to the ground, perform communication at as high a position as possible.

- TOPCON CORPORATION cannot guarantee full compatibility with all *Bluetooth* products on the market.

Other precautions

- Protect the instrument from heavy shocks or vibration.
- When setting up the instrument, position it so the bubble in the digital level vial on the display is in the center position.
- When you remove the instrument from the carrying case, be sure to open the cover of the case after laying the case down, right side up.
- Consult your local dealer before using the instrument under special conditions such as long periods of continuous use or high levels of humidity. In general, special conditions are treated as being outside the scope of the product warranty.
- Physical reflection and refraction may occur under hot weather conditions or in a small pipe diameter due to its temperature or moisture conditions, which could interfere with the precision or available range of the instrument. To minimize the effect of these conditions please take the following precautions.
  1) Place the pipe hot side (heated by sunlight etc.) down.
  2) Do not apply an excessive amount of "pipe adhesive" to the pipe joints.
  3) Immediately back fill the trench as pipe work is finished.

  If it is difficult to follow the instructions noted above, please use a blower (commercially-available) or place the instrument on the pipe before performing the operation.

User

- Wear the required protectors (safety shoes, helmet, etc.) when operating.

Exporting this product (Relating EAR)

- This product is equipped with the parts/units, and contains software/technology, which are subject to the EAR (Export Administration Regulations). Depending on countries you wish to export or bring the product to, a US export license may be required. In such a case, it is your responsibility to obtain the license. The countries requiring the license as of Mar. 2019 are shown below. Please consult the Export Administration Regulations as they are subject to change.

  North Korea
  Iran
  Syria
  Sudan
  Cuba

URL for the EAR of the US: http://www.bis.doc.gov/policiesandregulations/ear/index.htm

Exporting this product (Relating telecommunications regulations)

- Wireless communication module is incorporated in the instrument. Use of this technology must be compliant with telecommunications regulations of the country where the instrument is being used. Even exporting the wireless communication module may require conformity with the regulations. Contact your local dealer in advance.

Exceptions from Responsibility

- The manufacturer, or its representatives, assumes no responsibility for any damage, or loss of profits (change of data, loss of data, loss of profits, an interruption of business etc.) caused by use of the product or an unusable product.
- The manufacturer, or its representatives, assumes no responsibility for any damage, or loss of profits caused by usage different to that explained in this manual.
- The manufacturer, or its representatives, assumes no responsibility for consequential damage, or loss of profits due to heavy rain, strong wind, high-temperature and humidity, or storing or use of the product under unusual conditions.
- Product failures caused by rebuilding are out of warranty.
- Cautions and warnings included in this manual do not cover all the possible events.

3. LASER SAFETY INFORMATION

The TP-L6W is classified as a class 3R Laser Product according to IEC Standard Publication 60825-1 Ed.3.0: 2014 and United States Government Code of Federal Regulation FDA CDRH 21CFR Part 1040.10 and 1040.11 (Complies with FDA performance standards for laser products except for deviations pursuant to Laser Notice No.56, dated May 8, 2019.)

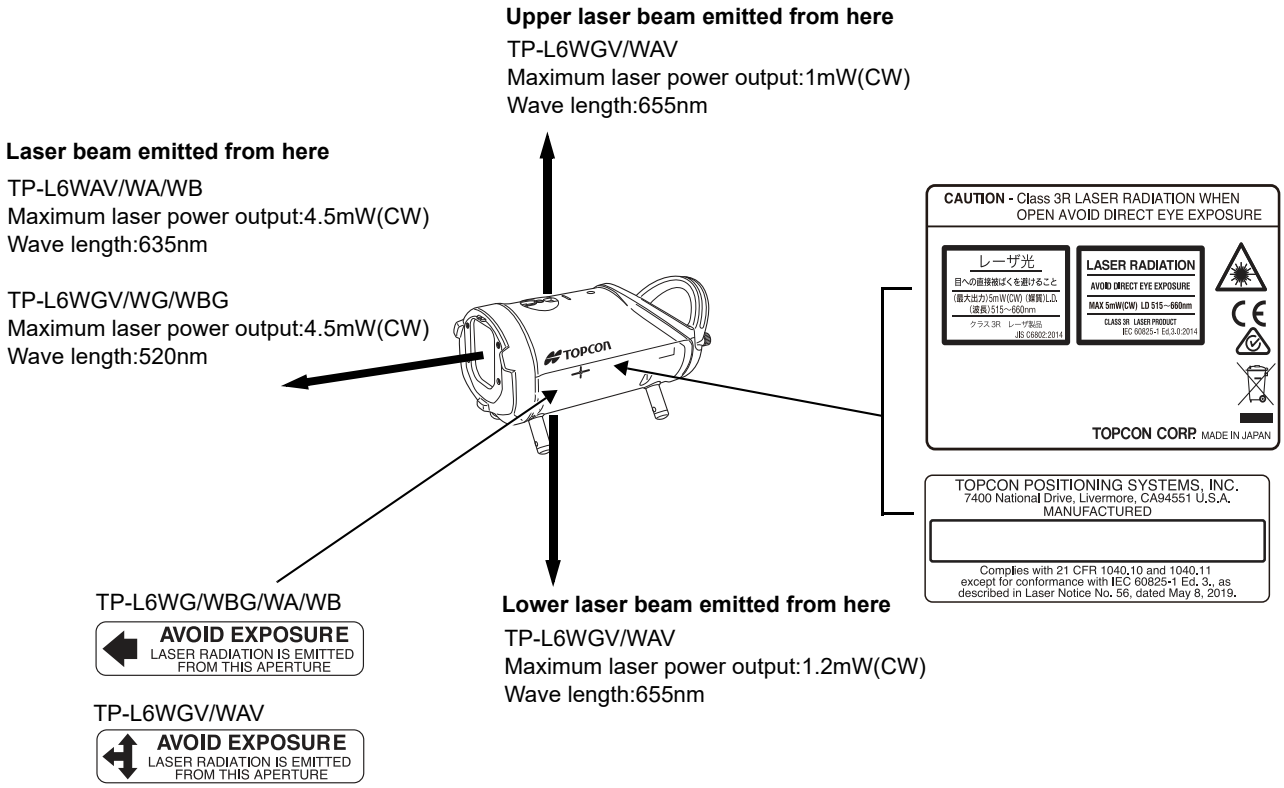

⚠Warning

- Use of controls or adjustments or performance of procedures other than those specified herein may result in hazardous radiation exposure.
- Never intentionally point the laser beam at another person. The laser beam is injurious to the eyes and skin. If an eye injury is caused by exposure to the laser beam, seek immediate medical attention from a licensed ophthalmologist.
- The laser beam is emitted when the power is turned ON. Before turning the power on, make sure that persons are not located in the path of the laser beam.
- Secure the instrument in a fixed position before it is used. If it is necessary to hold the instrument by hand, make sure that persons are not located in the area before the laser is emitted.
- Do not look directly into the laser beam. Doing so could cause permanent eye damage.
- Do not stare at the laser beam. Doing so could cause permanent eye damage.
- Never look at the laser beam through a telescope, binoculars or other optical instruments. Doing so could cause permanent eye damage.
- Sight targets so that the laser beam does not stray from them.

⚠Caution

- Perform checks at start of work and periodic checks and adjustments with the laser beam emitted under normal conditions.
- When the instrument is not being used, turn off the power.
- When disposing of the instrument, destroy the battery connector so that the laser beam cannot be emitted.
- Avoid setting the instrument at heights at which the path of the laser may strike pedestrians or drivers at head height. Operate the instrument with due caution to avoid injuries that may be caused by the laser beam unintentionally striking a person in the eye.
- Do not emit the laserbeam at eye level.
- Never point the laser beam at mirrors, windows or surfaces that are highly reflective. The reflected laser beam could cause serious injury
- Only those who have received training as per the following items shall use this product.
  - Read this manual for usage procedures for this product.
  - Hazardous protection procedures (read "LASER SAFETY INFORMATION")
  - Requisite protective gear (read "LASER SAFETY INFORMATION")
  - Accident reporting procedures (stipulate procedures beforehand for transporting the injured and contacting physicians in case there are laser-induced injuries).
- Persons working within the range of the laser beam are advised to wear eye protection which corresponds to the laser wavelength of the instrument being used. (OD2)
- Areas in which the laser is used should be posted with a standard laser warning sign.

4. PRODUCT OUTLINE

4.1 Parts and Functions of the Instrument

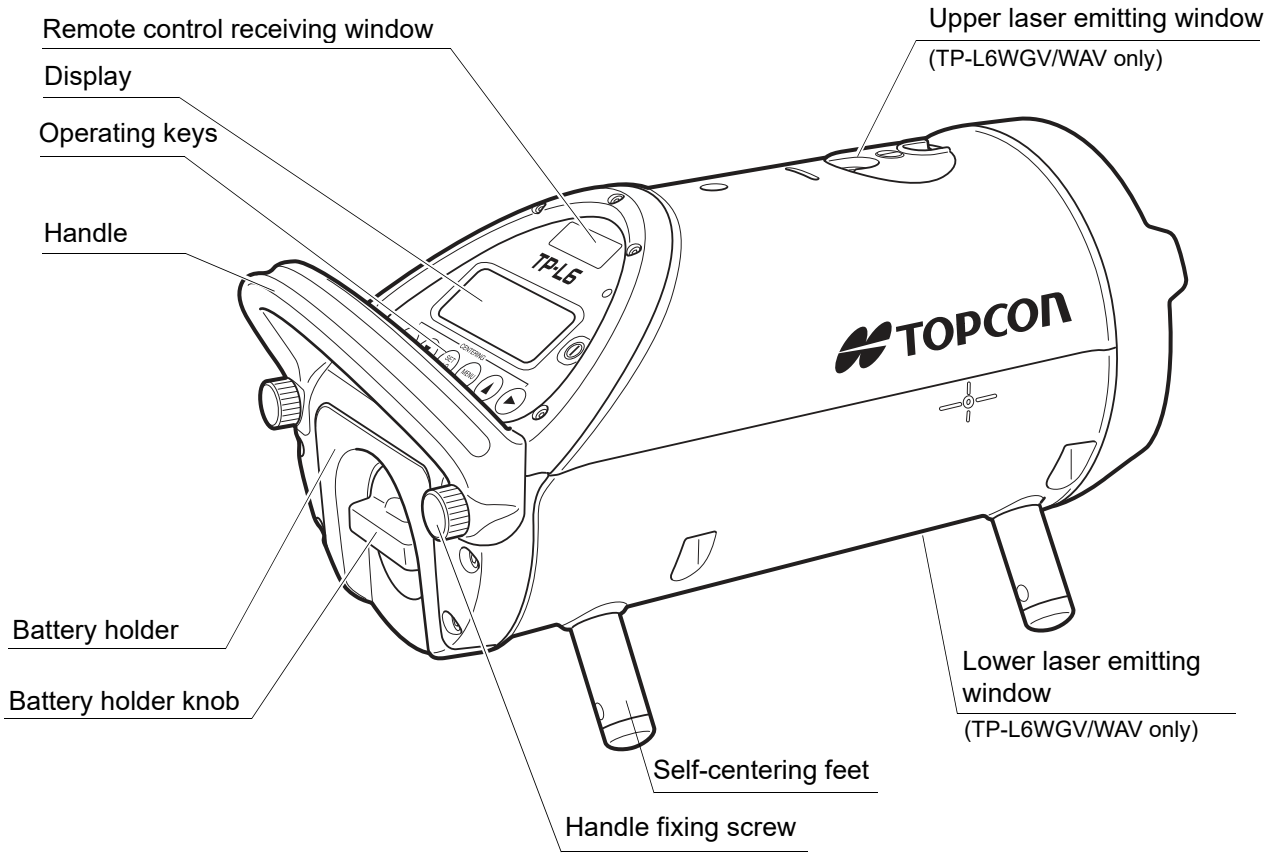

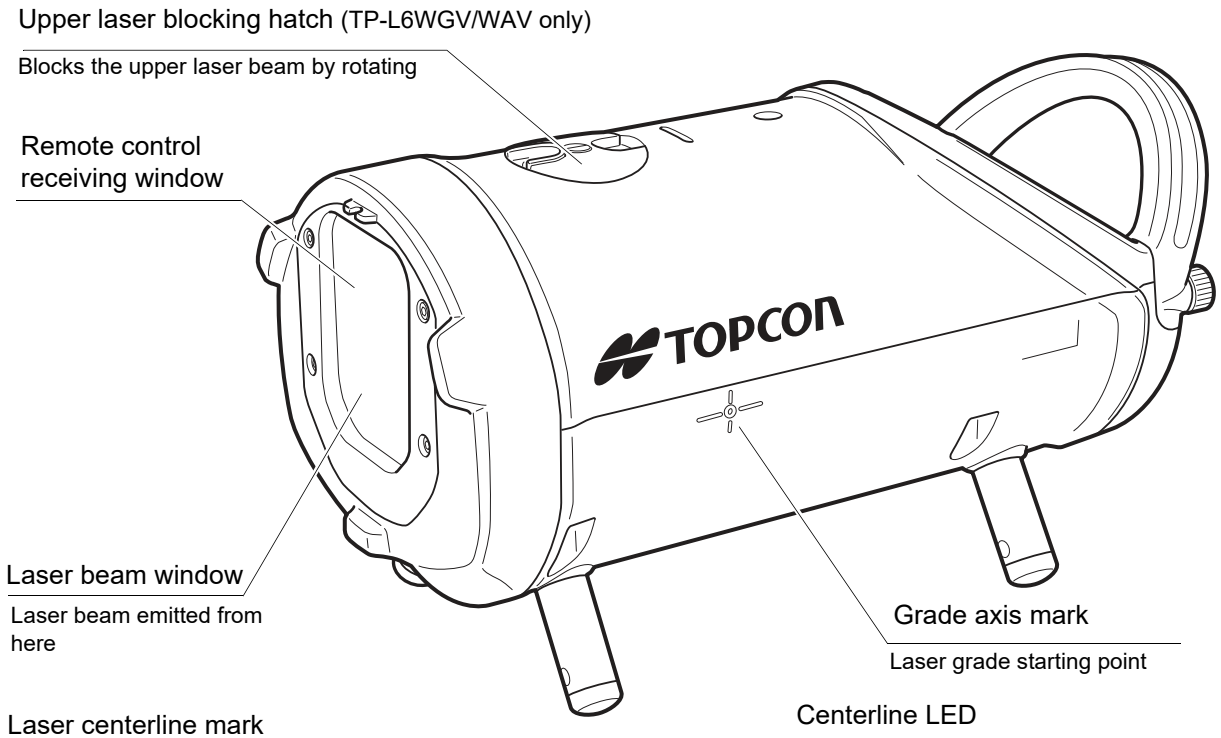

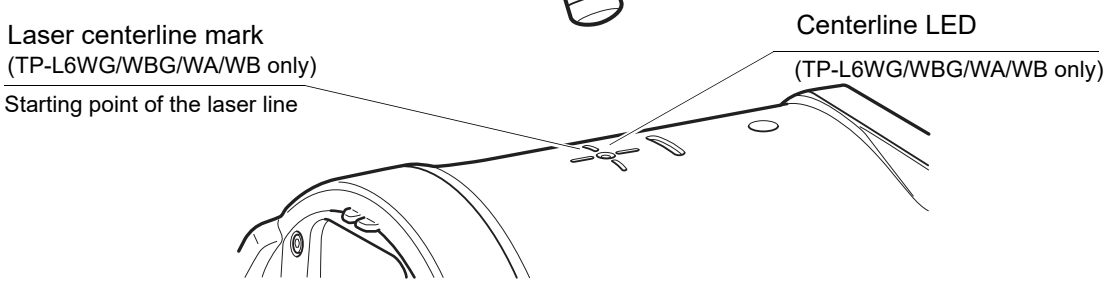

■ Control panel

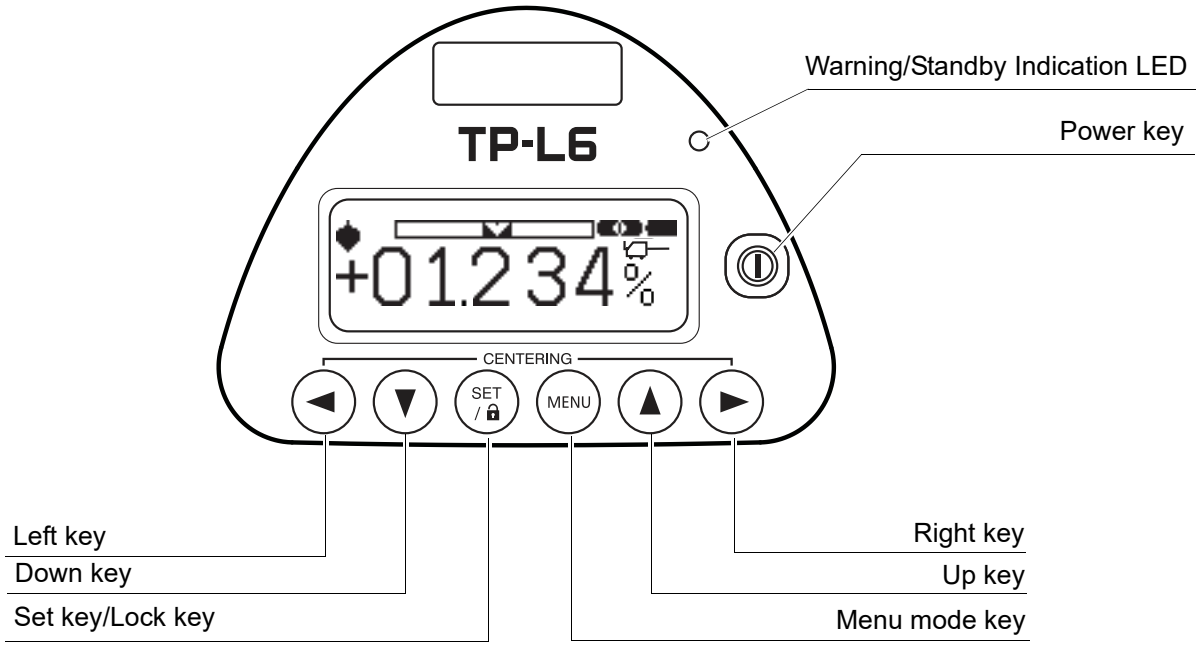

The illumination of the display will be ON for 30 seconds whenever anyone key is pressed.

Key/LED	Nomenclature	Function
	Power key	Turn the instrument ON or OFF.
○	Warning / Standby Indicator LED	Flashes to indicate warning or standby mode. When the standby mode is accessed by operating the remote controller, “STANDBY” is indicated on the display unit and the laser beam flashes every five seconds.
SET /	Set/Lock key	Set key (Press for a moment.): Press to perform basic operation and adjustment. Lock key (Press for 2 seconds or more.): Prohibits the input for some of keys on the instrument and remote controller and so prevents the set values from being changed by wrong operation. Press this key again to release the prohibition. ☞"Key Operation (When the instrument is locked)" (p.13)
MENU	Menu mode key	Press to change to "Menu mode". ☞"Menu mode" (p.12)
◄ ►	Rght key/Left key	Press to move the laser beam to the right or to the left. Active indicating digit shifts to the right or the left. ☞"6.3 Setting Laser Line" (p.22) By pressing both keys at the same time, the laser beam returns to the center automatically. ☞"Automatic Centering" (p.23)
▼ ▲	Up key/Down key	Press to move the laser beam up or down. Positive and negative values are indicated in the display for grade setting. By pressing both keys at the same time, returns grade to 00.000% (0‰).

■ Menu mode

Press [MENU mode] key to access "MENU" mode.
In "MENU" mode, you can use the following functions.

Display	Menu item	Function
BEAM SETTING	Beam setting	Turn ON/OFF Upper/Lower laser and Centerline LED. ☞"Setting ON/OFF of Upper/Lower laser and Centerline LED" (p.26) Set the laser mode. ☞"Setting ON/OFF of Upper/Lower laser and Centerline LED" (p.26) Set ON/OFF of the automatic power off (30 minutes) function for Upper/Lower laser and Centerline LED. ☞"Setting ON/OFF of Upper/Lower laser and Centerline LED" (p.26)
AUTO ALIGNMENT	Auto alignment	The laser beam is aligned to the center of the target automatically. ☞"Automatic alignment with the target (TP-L6WGV/WG/WAV/WA only)" (p.24)
DISPLAY SETTING	Display setting	Set the tilt sensor display method. Switch the unit of the grade values displayed ☞"Setting Display Method" (p.29)
BLUETOOTH	*Bluetooth* connection setting	Set *Bluetooth* connection. ☞"Setting Bluetooth Connection" (p.32)
SECURITY	Security mode	To prevent unauthorized use of the TP-L6W a security code can be set. ☞"SETTING SECURITY CODE" (p.36)

■ How to change menu items

In "MENU" mode, use [Down] key/[Up] key to access a desired menu item.

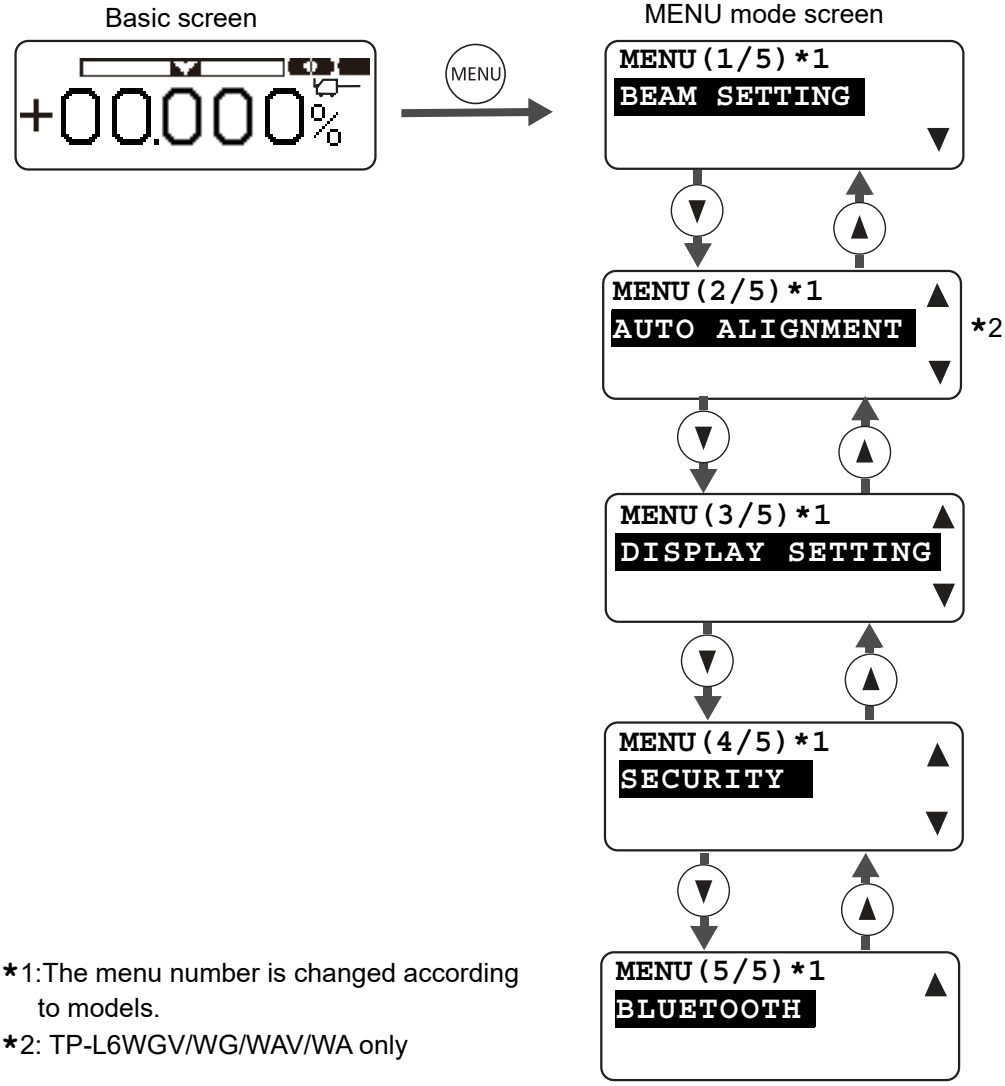

*1:The menu number is changed according to models.

*2: TP-L6WGV/WG/WAV/WA only

■ Key Operation (When the instrument is locked)

When the instrument is locked, the operable/inoperable keys of the instrument and the remote control are as follows.

TP-L6W

Operable functions	Setting ON/OFF of Centerline LED/LD
	Changing the laser mode
	Automatic power off function of Upper/ Lower laser and Centerline LED
	Power key
Inoperable functions	Up/Down key
	Right/Left key
	Set/Lock key (The lock release function is valid.)
	AUTO ALIGNMENT (Menu) (TP-L6WGV/WG/WAV/WA only)
	DISPLAY SETTING (Menu)
	SECURITY (Menu)
	BLUETOOTH (Menu)

RC-500

Operable functions	Centerline LED/Upper-Lower laser key
	Laser ON/OFF switch
	Laser beam mode key
Inoperable functions	Auto alignment key
	Laser right/left key

• Press the [Set/Lock] key(for more than two seconds) on the instrument to release the lock function.

■ Indicators

Laser line indicator

Indicates the direction of the laser line.

Digital level vial, rotate instrument until centered

Battery warning indication

Remaining battery capacity is shown in 3 steps.

Power remaining for operation

Operating time is limited. Recharging or an alternate battery will be required soon.

***Bluetooth* indication**

The *Bluetooth* power supply is ON.

Bluetooth is already connected.

Upper/Lower laser indication / Centerline LED indication

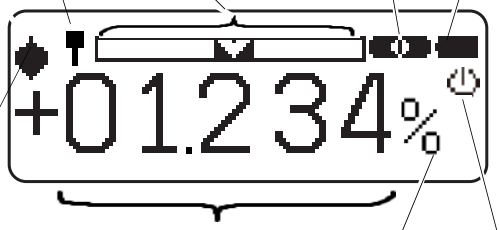

Grade indication

Auto leveling indication (Flashing)

Flashes when the instrument is auto leveled. After auto leveling is finished, the display changes laser mode.

Percent or Permil symbol

"Permil" is not indicated in some of the regions where the customers purchased the instruments.

Lock indication

Indicates when the instrument is locked.

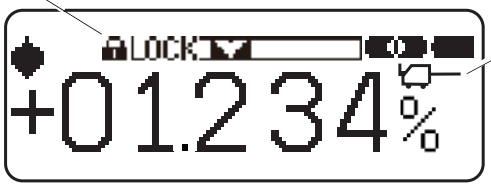

Laser mode indication

Indicates the laser mode.

☞"6.4 Setting Centerline LED/ Setting Laser" (p.26)

Sometimes the indicated matter is dimly seen according to the seeing angle.
This is a characteristic of the display unit being used.

Level vial display indicates instrument rotation status

When the instrument is titled sideways or the unit is first turned on, the small level vial indicator on the display enlarges to fill the entire display to aid the user in accurate instrument setup.

☞"6.5 Setting Display Method" (p.29)

Note

Rotating direction

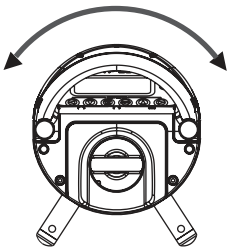

■ Warning indications

Battery warning indication
Operation is impossible. Replace with a fully charged battery.
Note
The laser beam is not emitted then, and the centerline LED does not turn on, too.
The power is automatically turned OFF within ten minutes.

Level warning indication
The instrument tilted beyond the auto-leveling range to the back or front.
The laser beam will flash slowly.
Reposition the instrument by tilting in the direction indicated by arrow.

Rotation warning indication
The instrument is tilted too far to the right or left.
The laser beam will flash slowly.
Reposition the instrument to the direction indicated by arrow.
Always position the instrument so the bubble in the digital level vial is centered.

Rotation direction detection error
Reposition the instrument horizontally.

During laser position adjusting process
The display will appear during the adjustment of the laser after the startup of the instrument. Operations can be performed just after "WAIT" disappears.

- If the battery is removed while the instrument is turned ON, this display may be appeared the next time the instrument starts up.
- This display may be appeared when operating at especially high/low temperature or starting up the instrument after the battery warning indication "EMPTY" being displayed.
- While "WAIT" is displayed, the key operations are impossible.

Safety Lock
If the instrument is moved for any reason after the laser is OFF (standby mode) using the remote controller, a safety lock will be in operation. This is to insure operational accuracy. "SAFETY LOCK" will appear on the display and the laser beam will flash. To reset, turn power OFF the instrument by the Power key on the control panel, check the instrument position, and then turn ON the instrument again. While the safety lock is in operation, power cannot be turned ON/OFF by the remote controller.

RETRY LASER
SETTING
WAIT

↓

PRESS
SET KEY

Laser position adjusting/Reconfirmation of the grade value

The display will appear when the laser adjustment and reconfirmation of the grade value are necessary.

- While "RETRY LASER SETTING WAIT" is displayed, the key operations are impossible.

"PRESS SET KEY" will appear on the display after completing the laser adjustment. Press [Set/Lock] key and confirm the grade value.

5. USING THE BATTERY

Be sure to charge the battery fully before using it for the first time or after not using it for long periods.

- The charger will become rather hot during use. This is normal.
- Do not use or charge batteries other than those designated.
  (Battery:BDC72 Charger:CDC77)
- Do not charge the battery just after charging is completed. Battery performance may decline.
- The charger is for indoor use only. Do not use outdoors.
- Batteries cannot be charged when the temperature is outside the charging temperature range. Be sure to charge the battery within the charging temperature range.
- Remove batteries from the charger before putting into storage.
- When not in use, disconnect the power cable plug from the wall outlet.
- Store the battery in a dry room where the temperature is within the following ranges. For long-term storage, the battery should be charged at least once every six months.

Storage period	Temperature range
1 month or less	-20 to 50°C
1 month to 3 months	-20 to 40°C
3 months to 1 year	-20 to 20°C

- Batteries generate power using a chemical reaction and as a result have a limited lifetime. Even when in storage and not used for long periods, battery capacity deteriorates with the passage of time. This may result in the operating time of the battery shortening despite having been charged correctly. In this event, a new battery is required.

5.1 Battery Charging

1. Connect the power cable to the charger and plug the charger into the wall outlet.

2. Mount the battery in the charger by matching the grooves on the battery with the guides on the charger. When charging starts, the lamp starts flashing in green. The lamp lights up in green when charging is finished.

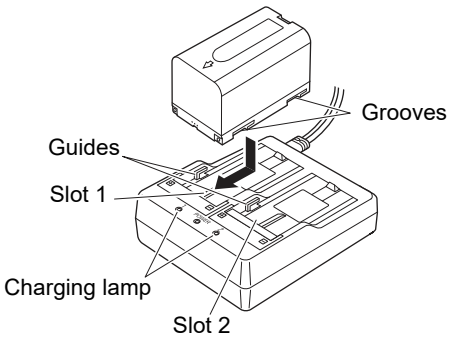

3. Remove the battery and unplug the charger.

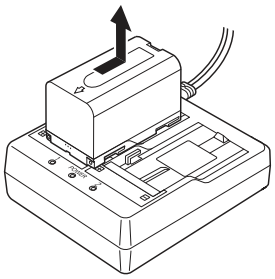

Note

- Slots 1 and 2:
  The battery charger can hold and charge up to two batteries at the same time.
- Charging time per battery:
  BDC72: about 8 hours (at 25°C)
  (Charging can take longer than the times stated above when temperatures are either especially high or low.)
- Charging lamp:

LED	Description
Green lamp flashing	On charge
Green lamp lit	Fully charged
Yellow lamp flashing	Battery temperature is out of charging temperature range. Charge the battery again within the charging temperature range. If the yellow lamp still does not stop flashing, contact your local dealer.
Off	The battery is not correctly mounted. Mount it again correctly. If the lamp is still off, contact your local dealer.
Red lamp lit	Charging is not being normally performed. There may be trouble with the charger or battery. Contact your local dealer.

5.2 Installing the Battery

1. Turn the battery holder knob to the “Open” side until it stops.
2. Remove the battery holder.

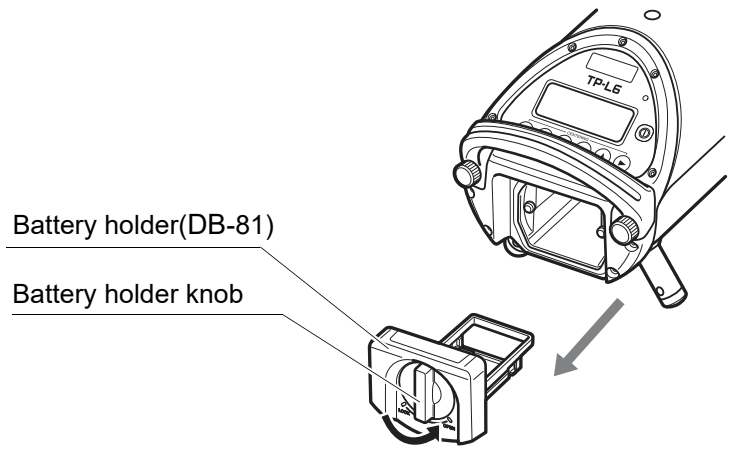

3. As shown below, install the battery to the battery holder.

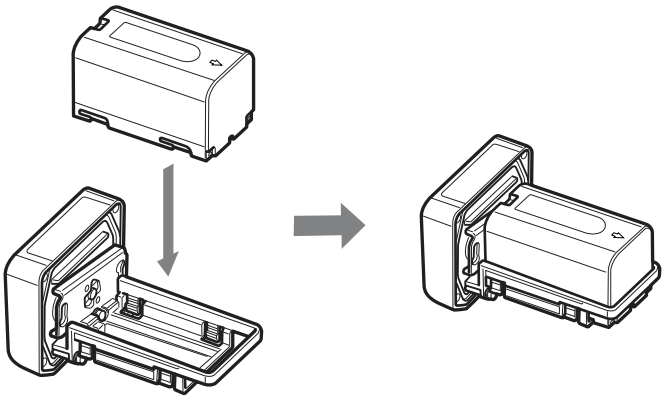

4. Attach the battery holder to the TP-L6W.

5. Attach the battery holder to the TP-L6W and turn the battery holder knob to the “LOCK” side to fix the battery holder.

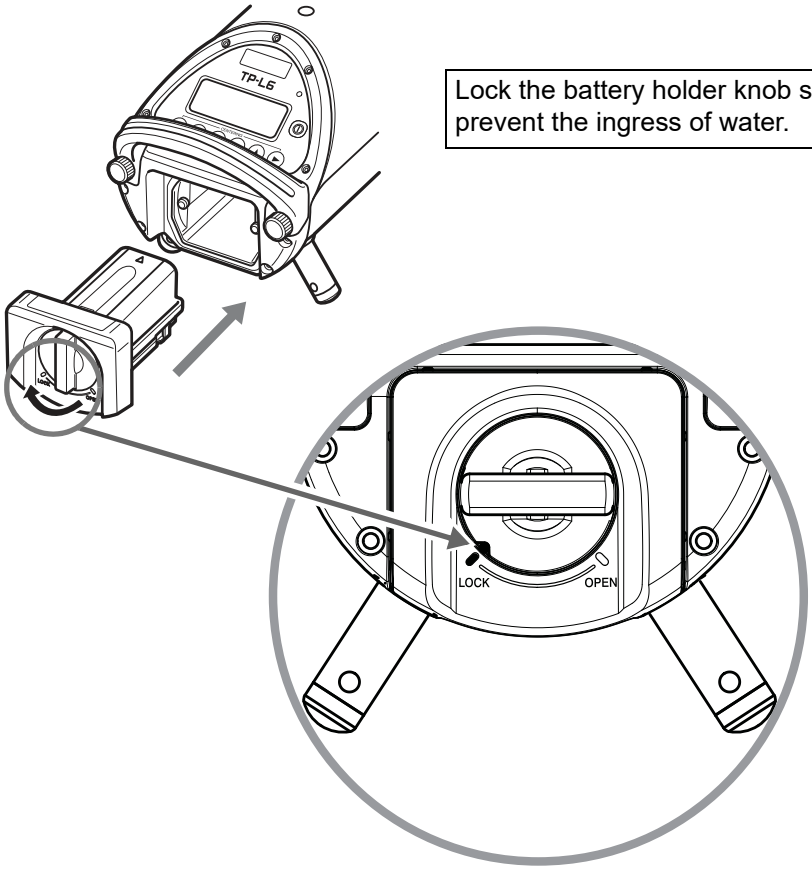

Lock the battery holder knob securely to prevent the ingress of water.

• Before removing the battery, turn OFF the TP-L6W power key.

6. BASIC OPERATION

6.1 Setting up the Instrument

1. Always position the instrument so the bubble in the digital level vial is centered.

- The laser might move from side to side in order to adjust the position of laser beam after the instrument is turned ON (See WAIT display on p.15). The instrument is not operable during this adjusting process (for about 30 seconds).

The instrument has a self-leveling range of ±10%. To assure proper self-leveling the instrument must be positioned to within 10% of the grade entered.

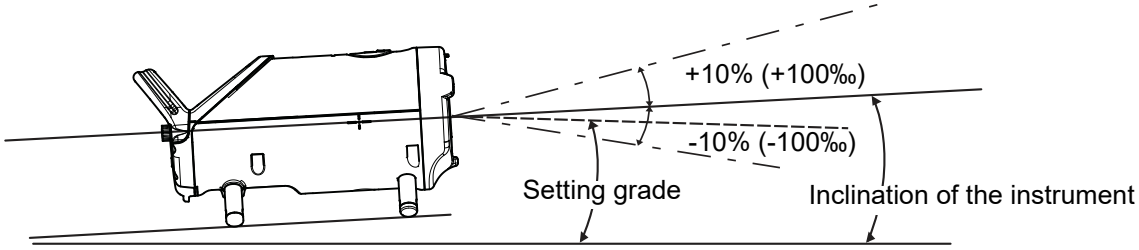

- A warning indication will appear depending on the instrument's installed condition.
  ☞"Warning indications" (p.15)
- For the details of Self-centering Feet to be used, ☞"Self-centering Feet" (p.42)

6.2 Grade setting procedure

■ Direct entry of grade value

(Example) Setting grade of -12.345% (Format ± AB.CDE%)

- Input range: -15.000 to 40.000% (-150.00 to 400.00‰)
- Setting grade is not possible when the instrument is locked.

Procedure	Key operation	Display
1. Press [Set/Lock] key. The previous data will be shown, and ± mark is highlighted.	SET / 🔒	+00.000%
2. Press [Down] or [Up] key to change the sign to -.	▼ or ▲	-00.000%
3. Press [Right] key to shift to digit A. Disit A is highlighted.	►	-00.000%
4. Press [Down] or [Up] key to change value to "1".	▼ or ▲	-10.000%

Procedure	Key operation	Display
5. Press [Right] key to shift to digit B. Disit B is highlighted.	►	-10.000%
6. Press [Down] or [Up] key to change value to "2".	▼ or ▲	-12.000%
7. Repeat previous steps to change values of digit C to "3", digit D to "4" and digit E to "5".	. . . .	-12.345%
8. Press [Set/Lock] key. After entering, the instrument starts repositioning the laser to the grade. The auto leveling indication blinks during the grade setting process. The laser beam blinks at the same time.	SET / 🔒	SET

• The grade value displayed on the screen will be set automatically if no value is entered within 15 seconds.

■ Set grade value by moving laser

Grade value can be set directly by moving laser up or down.

1. Be sure that the lock is disengaged before operating.
2. Press [Up] or [Down] key, the laser beam moves up or down.

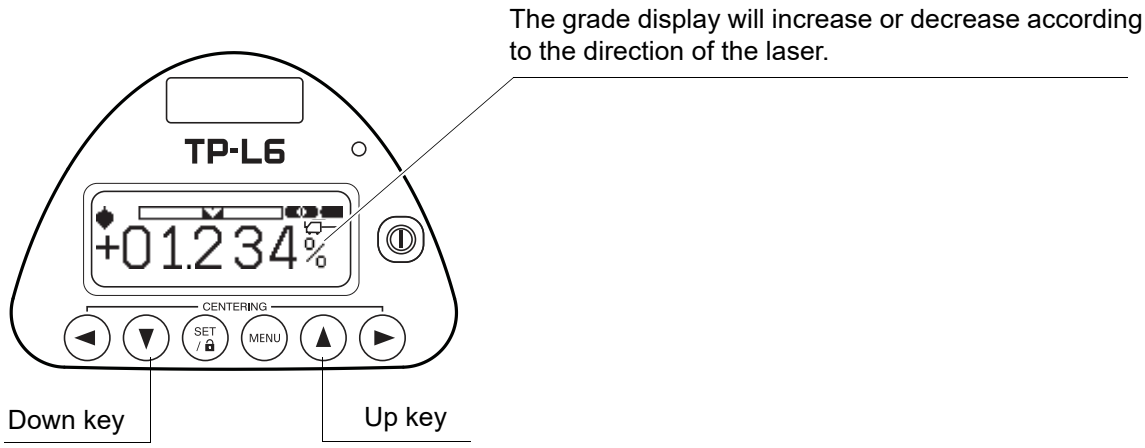

Note

• 0 setting
Pressing the [Up] and [Down] key at the same time, the display and the laser will return to 00.000% (0‰).

6.3 Setting Laser Line

After setting the grade value, set the laser line.
Use [Left] key and [Right] key to set the laser line.
The maximum adjusting range is 9 m (29.5 ft.) at a distance of 30 m (100ft.)
The speed of the line travel is variable. When the key is first pressed, the speed will be slow.
By pressing the key continuously, the speed of line travel will increase.
The relative position of the laser beam is shown on the display as indicated below.

1. By pressing the [Right] or [Left] key, move the horizontal laser position to the right or left required.

• Setting Laser Line is not possible when the instrument is locked.

This display indicates that the laser line is positioned at the left end of the adjustment range. The laser line will not travel to the left even if the [Left] key is held down. In addition, the laser will blink to alert the user of this condition. It is always a good idea to pre-position the laser to the center of its adjusting range prior to setup.

LASER LINE INDICATOR

This display indicates that the laser line is positioned at the right end of the adjustment range. The laser line will not travel to the right even if the [Right] key is held down. In addition, the laser will blink to alert the user of this condition. It is always a good idea to pre-position the laser to the center of its adjusting range prior to setup.

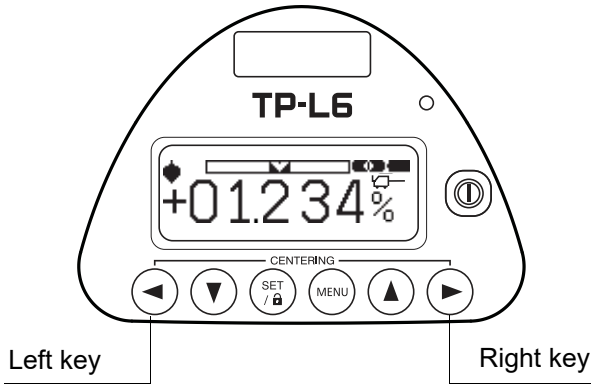

Maximum line adjust range

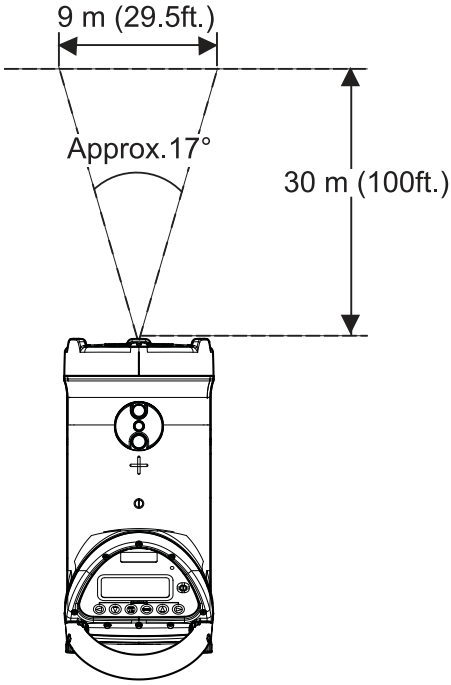

When operating through RC-500

1. Make sure that the basic screen is indicated on the TP-L6W.
2. In order to emit the laser beam correctly to the reference point of laser line, press [Laser right/left] keys of the remote controller RC-500 and move the laser emission position horizontally.

Laser right/left key

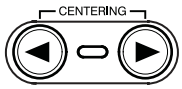

For the details of RC-500, refer to the following chapter. ☞"8.2 Remote Controller (RC-500)" (p.43)

■ Automatic Centering

1. Press both [Right] and [Left] keys at the same time.
   The laser will return to the center of the line adjustment range automatically.

• Automatic centering is not possible when the instrument is locked.

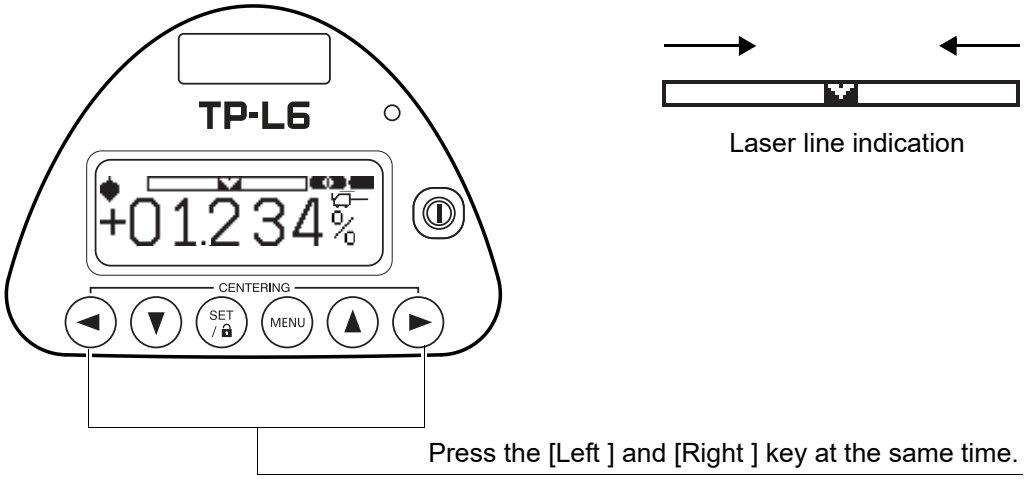

When operating through RC-500

1. Make sure that the basic screen is indicated on the TP-L6W.
2. Press [Laser right/left] keys of the remote controller RC-500 at the same time.
   The laser will return to the center of the line adjustment range automatically.

Laser right/left key

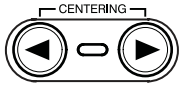

For the details of RC-500, ☞"8.2 Remote Controller (RC-500)" (p.43)

■ Automatic alignment with the target (TP-L6WGV/WG/WAV/WA only)

When the alignment is placed on centerline so it is in the alignment path of the beam, the laser will search the horizontal center of the target and automatically align the beam to it.

Note

• This function is helpful for second day set ups.

Preparation:

Set the alignment target as follows.

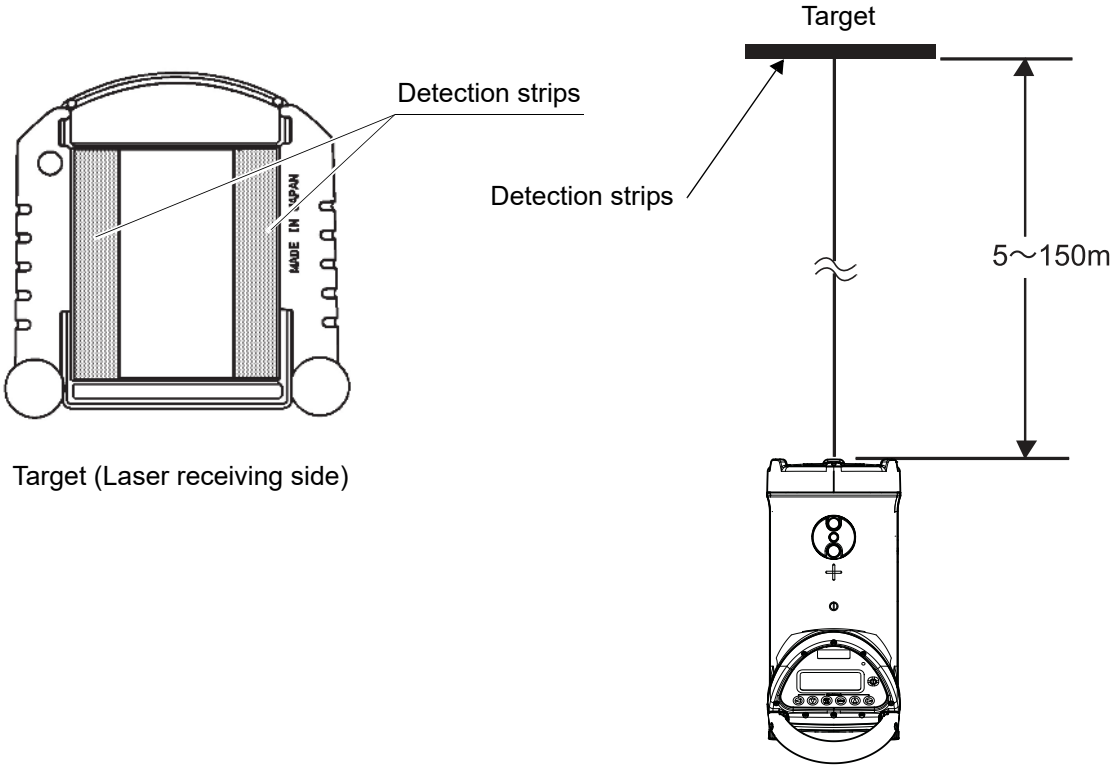

Procedure	Key operation	Display
1. Press [Menu mode] key.	MENU	MENU(1/5)*1 BEAM SETTING ▼
2. Press [Down] key. [AUTO ALIGNMENT] is indicated.	▼	MENU(2/5)*1 ▲ AUTO ALIGNMENT ▼
3. Press [Set/Lock] key. The instrument starts automatic alignment and the following display is shown.	SET / 🔒	WAIT

The display shows auto leveling is in process.
After auto leveling is completed, automatic alignment starts.

The display shows auto alignment is in process.
Each step shows alignment progress.

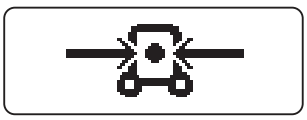

Automatic alignment in progress

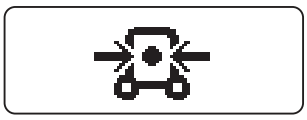

Automatic alignment will finish soon.

Alignment is completed.
Confirm the laser beam on the target.
If necessary, use the [Right]/[Left] key and align the laser precisely.

Alignment target is lost during auto alignment mode.
Check the instrument and target and perform automatic alignment again.

* 1: The menu number is changed according to models.

When operating through RC-500

1. Make sure that the basic screen is indicated on the TP-L6W.
2. Press [Automatic alignment mode] key.
   Automatic alignment starts.

Automatic alignment mode key

3. After automatic alignment is completed, if necessary, use [Laser right/left] keys to set the laser line precisely.
   For the details of RC-500, ☞"8.2 Remote Controller (RC-500)" (p.43)

- Automatic alignment is not possible when the instrument is locked.
- Large atmospheric motions could shorten the range of use of automatic alignment. To prevent atmospheric motions from occurring, limit the working range within the shade or use a blower (commercially-available) for working.
- When using the RC-500 remote controller at close range during auto alignment mode, the laser may be subject to stop outside the target. Press the [Automatic alignment mode] key to start automatic alignment again.

6.4 Setting Centerline LED/Setting Laser

■ Setting ON/OFF of Upper/Lower laser and Centerline LED

- Set ON/OFF of Upper/Lower laser. (TP-L6WGV/WAV only): "V-LD" is indicated on the screen.
- Set ON/OFF of Centerline LED. (TP-L6WG/WBG/WA/WB only): "V-LED" is indicated on the screen.

Factory setting : [OFF]

Procedure	Key operation	Display
1. Press [Menu mode] key. *1	MENU	MENU(1/5)*3 BEAM SETTING ▼
2. Press [Set/Lock] key. *2	SET / 🔒	BEAM(1/3) ▲ V-LD ON OFF ▼
3. Press [Right] key or [Left] key to highlight [ON]. *2	◄ or ►	BEAM(1/3) ▲ V-LD ON OFF ▼
4. Press [Set/Lock] key. Setting is completed.	SET / 🔒	SET ↓ +00.000%

* 1: Press [Menu mode] key, and the instrument returns to the “Basic screen” status.
* 2: Press [Menu mode] key, and the instrument returns to the “Procedure 1” status.
* 3: The menu number is changed according to models.

When operating through RC-500

1. Make sure that the basic screen is indicated on the TP-L6W.
2. Press [Upper-Lower laser]/[Centerline LED] key.

Upper-Lower laser / Centerline LED key

Upper/Lower laser or Centerline LED is ON.
Each time you press the key, ON and OFF are changed to each other.
For the details of RC-500, ☞"8.2 Remote Controller (RC-500)" (p.43)

■ Setting Upper/Lower laser and Centerline LED automatic power off

- When you want to activate "automatic power off (after 30 minutes)" for Upper/Lower laser, set this function. (TP-L6WGV/WAV only):
  "V-LD" is indicated on the screen.
- When you want to activate "automatic power off (after 30 minutes)" for Centerline LED, set this function. (TP-L6WG/WBG/WA/WB only):
  "V-LED" is indicated on the screen.

Factory setting : [30]

Set [NO], and this function is invalidated.

Procedure	Key operation	Display
1. Press [Menu mode] key. *1	MENU	MENU(1/5)*3 BEAM SETTING ▼
2. Press [Set/Lock] key. *2	SET / 🔒	BEAM(1/3) ▲ V-LD ON OFF ▼
3. Press [Down] key twice. *2	▼ Twice	BEAM(3/3) ▲ AUTO OFF NO 30
4. Press [Right] key or [Left] key to highlight [NO]. *2	◄ or ►	BEAM(3/3) ▲ AUTO OFF NO 30
5. Press [Set/Lock] key. The "automatic power off (after 30 minutes)" function is invalidated.	SET / 🔒	SET ↓ +00.000%

* 1: Press [Menu mode] key, and the instrument returns to the “Basic screen” status.
* 2: Press [Menu mode] key, and the instrument returns to the “Procedure 1” status.
* 3: The menu number is changed according to models.

■ Changing the laser mode (ON/Blinking/Energy-saving)

As mentioned below, the laser mode can be changed.
Factory setting : "ON mode"

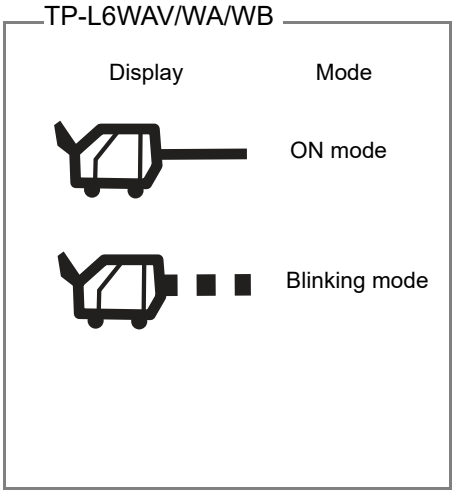

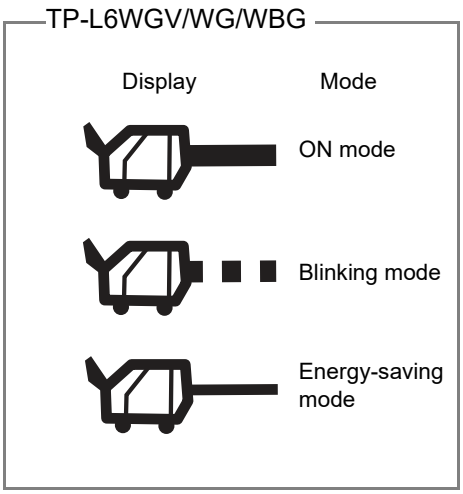

Procedure	Key operation	Display
1. Press [Menu mode] key. *1	MENU	MENU(1/5)*3 BEAM SETTING ▼
2. Press [Set/Lock] key. *2	SET / 🔒	BEAM(1/3) ▲ V LED ON OFF ▼
3. Press [Down] key. *2	▼	BEAM(2/3) ▲ MODE ▼
4. Press [Left] key or [Right] key to select a mode. The selected mode is highlighted. *2	◄ or ►	BEAM(2/3) ▲ MODE ▼
5. Press [Set/Lock] key. The mode is changed.	SET / 🔒	SET ↓ +00.000%

* 1: Press [Menu mode] key, and the instrument returns to the “Basic screen” status.
* 2: Press [Menu mode] key, and the instrument returns to the “Procedure 1” status.
* 3: The menu number is changed according to models.

When operating through RC-500

1. Make sure that the basic screen is indicated on the TP-L6W.
2. Press [Laser beam mode] key.

Laser beam mode key

Each time you press [Laser beam mode] key, the mode is changed as shown below.
For the details of RC-500, ☞"8.2 Remote Controller (RC-500)" (p.43)

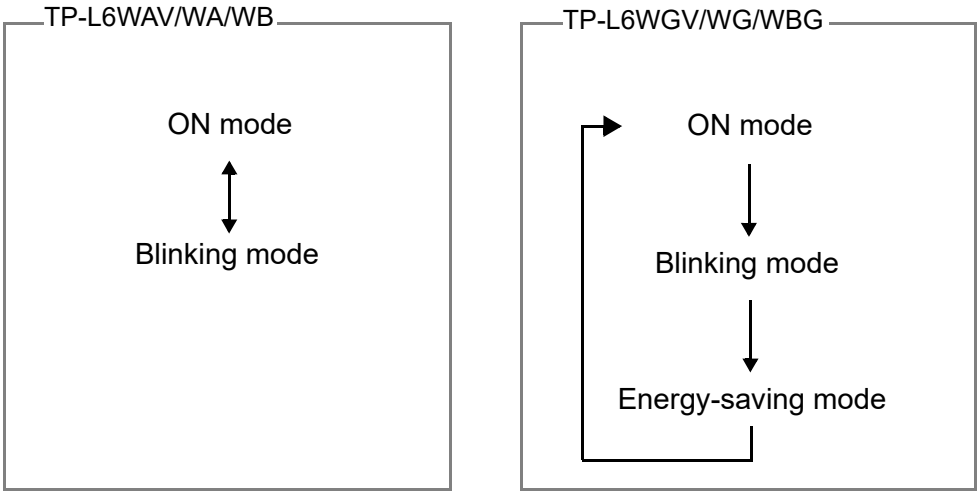

6.5 Setting Display Method

You can set the following items according to the work contents.

■ Enlarging digital level vial indication when power is ON

Press the power key when the power is OFF, and the digital level vial indication is enlarged. Press the power key again, and the instrument starts.
Factory setting : [ON]

Procedure	Key operation	Display
1. Press [Menu mode] key. *1	MENU	MENU(1/5)*3 BEAM SETTING ▼
2. Press [Down] key twice. *1	▼ Twice	MENU(3/5)*3 ▲ DISPLAY SETTING ▼
3. Press [Set/Lock] key. *2	SET / 🔒	DISPLAY(1/3) R-TILT DISP-1 ON OFF

Procedure	Key operation	Display
4. Press [Right] key to highlight [OFF]. *2	►	DISPLAY(1/3) R-TILT DISP-1 ON OFF ▼
5. Press [Set/Lock] key. Setting is set to [OFF].	SET / 🔒	SET ↓ +00.000%

* 1: Press [Menu mode] key, and the instrument returns to the “Basic screen” status.
* 2: Press [Menu mode] key, and the instrument returns to the “Procedure 2” status.
* 3: The menu number is changed according to models.

■ Enlarging digital level vial indication by tilt in rotating direction

If the instrument is tilted during auto leveling, the digital level vial indication is enlarged. This enlarged indication status is released when the instrument is stabilized or when any other key is pressed.
Factory setting : [ON]

Procedure	Key operation	Display
1. Press [Menu mode] key. *1	MENU	MENU(1/5)*3 BEAM SETTING ▼
2. Press [Down] key twice. *1	▼ Twice	MENU(3/5)*3 ▲ DISPLAY SETTING ▼
3. Press [Set/Lock] key. *2	SET / 🔒	DISPLAY(1/3) R-TILT DISP-1 ON OFF ▼
4. Press [Down] key. *2	▼	DISPLAY(2/3) R-TILT DISP-2 ON OFF ▼
5. Press [Right] key to highlight [OFF]. *2	►	DISPLAY(2/3) R-TILT DISP-2 ON OFF ▼

Procedure	Key operation	Display
6. Press [Set/Lock] key. Setting is completed.	SET / 🔒	SET ↓ +00.000 %

* 1: Press [Menu mode] key, and the instrument returns to the “Basic screen” status.
* 2: Press [Menu mode] key, and the instrument returns to the “Procedure 2” status.
* 3: The menu number is changed according to models.

■ Setting grade value unit

Set the grade value unit to [%] or [‰].
Factory setting : [%]

Procedure	Key operation	Display
1. Press [Menu mode] key. *1	MENU	MENU(1/5)* 3: BEAM SETTING ▼
2. Press [Down] key twice. *1	▼ Twice	MENU(3/5)* 3: ▲ DISPLAY SETTING ▼
3. Press [Set/Lock] key. *2	SET / 🔒	DISPLAY(1/3) R-TILT DISP-1 ON OFF ▼
4. Press [Down] key twice. *2	▼ Twice	DISPLAY(3/3) ▲ UNIT % ‰
5. Press [Right] key to highlight [‰]. *2	►	DISPLAY(3/3) ▲ UNIT % ‰
6. Press [Set/Lock] key. The unit is set to [‰].	SET / 🔒	SET ↓ +000.00 ‰

* 1: Press [Menu mode] key, and the instrument returns to the “Basic screen” status.
* 2: Press [Menu mode] key, and the instrument returns to the “Procedure 2” status.
* 3: The menu number is changed according to models.

6.6 Setting *Bluetooth* Connection

To operate the TP-L6W with smartphone, it is necessary to set *Bluetooth* connection (pairing).
After pairing is performed, connect to the smartphone.

- Pairing with smartphone is stored up to five units. When pairing with more than five smartphone units is done, the pairing data are deleted from the oldest in the chronological order.
- When connected with a smartphone, the connection is held until the time mentioned below.
  - When canceling the connection from the smartphone;
    or
  - When pairing is performed with any other smartphone.
- Laser Manager is an application on Android Mobile for remote control and support.
  - If TP-L6W is not displayed during the pairing search in Laser Manager, please complete pairing on the OS. After that, please do pairing again by Laser Manager.
  - When pairing with some instruments on Laser Manager, *Bluetooth* connection between instrument and Laser Manager may take some time. Please remove unnecessary instruments from *Bluetooth* connection history list on Laser Manager.
  - After disconnecting *Bluetooth* by Laser Manager, the instrument icon may not be displayed on the search screen. Please wait for a while and re-enter the *Bluetooth* connection screen again.

■ Turning ON the *Bluetooth* power supply

When the *Bluetooth* power supply is ON, the "*Bluetooth* power ON" icon is indicated.
Factory setting: [OFF]

Procedure	Key operation	Display
1. Press [Menu mode] key. *1	MENU	MENU(1/5)*3 BEAM SETTING ▼
2. Press [Down] key four times. *1	▼ Four times	MENU(5/5)*3 ▲ BLUETOOTH ▼
3. Press [Set/Lock] key. *2	SET / 🔒	BLUETOOTH(1/3) BT POWER ON OFF ▼
4. Press [Left] key. *2	◄	BLUETOOTH(1/3) BT POWER ON OFF ▼

Procedure	Key operation	Display
5. Press [Set/Lock] key. The *Bluetooth* power supply is ON.	SET / 🔒	SET "*Bluetooth* power ON" icon +00.000%

* 1: Press [Menu mode] key, and the instrument returns to the “Basic screen” status.
* 2: Press [Menu mode] key, and the instrument returns to the “Procedure 2” status.
* 3: The menu number is changed according to models.

■ Performing pairing with smartphone

Procedure	Key operation	Display
1. Press [Menu mode] key. *1	MENU	MENU(1/5)*4 BEAM SETTING ▼
2. Press [Down] key four times. *1	▼ Four times	MENU(5/5)*4 ▲ BLUETOOTH ▼
3. Press [Set/Lock] key. *2	SET / 🔒	BLUETOOTH(1/3) BT POWER ON OFF ▼
4. Press [Down] key. *2	▼	BLUETOOTH(2/3) ▲ PAIRING ▼
5. Press [Set/Lock] key. *3 Press [Set/Lock] key again. Pairing is stopped and the basic screen appears again. In this case, if data is changed in any other item of the menu, the change is stored.	SET / 🔒	PAIRING

Procedure	Key operation	Display
6. Search the TP-L6W from the smartphone and perform pairing. When pairing is completed, "SET" is indicated and the basic screen appears again. • For the searching method, refer to the instruction manual of the software used in the smartphone. • For the searching method, follow the instructions of the software used in the smartphone.		SET +00.000%

* 1: Press [Menu mode] key, and the instrument returns to the “Basic screen” status.
* 2: Press [Menu mode] key, and the instrument returns to the “Procedure 2” status.
* 3: Press [Menu mode] key, and the instrument returns to the “Procedure 4” status.
* 4: The menu number is changed according to models.

■ Connecting to smartphone

Procedure	Key operation	Display
1. Make sure that the *Bluetooth* power supply is ON.		
2. Under the condition that the basic screen is indicated, carry out connection from the smartphone for which pairing has already been done. After the connection is completed, the *Bluetooth* icon status is changed from "power ON" to "Already connected".		+00.000% +00.000%

■ Checking the *Bluetooth* address

Procedure	Key operation	Display
1. Press [Menu mode] key. *1	MENU	MENU (1/5) * 3 BEAM SETTING ▼
2. Press [Down] key four times. *1	▼ Four times	MENU (5/5) * 3 ▲ BLUETOOTH ▼

Procedure	Key operation	Display
3. Press [Set/Lock] key. *2	SET / 🔒	BLUETOOTH(1/3) BT POWER ON OFF ▼
4. Press [Down] key twice. *2 The *Bluetooth* address is displayed. (Example:0123456789AB) Press [Set/Lock] key again, and the basic screen appears again. In this case, if data is changed in any other item of the menu, the change is stored.	▼ Twice	BLUETOOTH(3/3) ▲ BT ADDRESS 0123456789AB

* 1: Press [Menu mode] key, and the instrument returns to the “Basic screen” status.
* 2: Press [Menu mode] key, and the instrument returns to the “Procedure 2” status.
* 3: The menu number is changed according to models.

7. SETTING SECURITY CODE

To prevent unauthorized use of the TP-L6W a four-digit security can be set. The following table describes how to activate the security mode (S CODE) and select a four-digit code.
When Security mode is set, it is necessary to input the code every time power is turned on (in Normal mode, Selecting mode and Checking & Adjusting mode).

- Memorize the security code and file it in a safe place. It is not possible to operate the TP-L6W without entering the code.

Procedure	Key operation	Display
1. Press [Menu mode] key.	MENU	MENU(1/5)*3 BEAM SETTING ▼
2. Press [Down] key three times.	▼ Three times	MENU(4/5)*3 ▲ SECURITY
3. Press [Set/Lock] key.	SET/🔒	SECURITY(1/2) INPUT S CODE ▼
4. Press [Set/Lock] key.*1	SET/🔒	ENTER 01234 SECURITY 56789 CODE[ ] ENT
5. Select a numeric character by pressing the [Up], [Down], [Right], [Left] keys. Example: 4	▼ or ▲ ◄ or ►	ENTER 01234 SECURITY 56789 CODE[ ] ENT
6. Press [Set/Lock] key.	SET/🔒	ENTER 01234 SECURITY 56789 CODE[4] ENT
7. Repeat steps 5 and 6 to set remaining three code numbers. Example: 4852 *2		ENTER 01234 SECURITY 56789 CODE[4852] ENT
8. Select [ENT] by pressing the [Up], [Down], [Right], [Left] keys.	▼ or ▲ ◄ or ►	ENTER 01234 SECURITY 56789 CODE[4852] ENT

Procedure	Key operation	Display
9. Press [Set/Lock] key.	SET / 🔒	SET ↓ +00.000 %

*1: When security code has been entered, but security mode is OFF, input of current security code is necessary to change security code.

*2: After all four digits are chosen and the [Set/Lock] key is pressed, each digit will highlight in sequence. While it is higlighting, it is possible to change the number in case of error.

* 3: The menu number is changed according to models.

7.1 Setting ON/OFF of Security Mode

Example: Set security mode to ON.

Factory setting : [OFF]

Procedure	Key operation	Display
1. Press [Power] key. When security mode is ON, the security code must be input to operate. 2. Press [MENU mode] key.	MENU	MENU(1/5)*1 BEAM SETTING ▼
3. Press [Down] key three times.	▼ Three times	MENU(4/5)*1 ▲ SECURITY
4. Press [Set/Lock] key.	SET / 🔒	SECURITY(1/3) S CODE ON OFF ▼
5. Press [Left] key to fit the cursor to [ON].	◄	SECURITY(1/3) S CODE ON OFF ▼
6. Press [Set/Lock] key. Security mode is set to ON.	SET / 🔒	SET ↓ +00.000 %

* 1: メニュー番号は機種により異なります。

7.2 Changing Security Code

Example: Change security code to "5246".

Procedure	Key operation	Display
1. Press [Menu mode] key.	MENU	MENU(1/5)*1 BEAM SETTING ▼
2. Press [Down] key three times.	▼ Three times	MENU(4/5)*1 ▲ SECURITY
3. Press [Set/Lock] key.	SET / 🔒	SECURITY(1/3) S CODE ON OFF ▼
4. Press [Down] key.	▼	SECURITY(2/3) ▲ CHANGE S CODE ▼
5. Press [Set/Lock] key.	SET / 🔒	ENTER 01234 SECURITY 56789 CODE[ ] ENT
6. Select a numeric character by pressing the [Up], [Down], [Right], [Left] keys. Example: 5	▼ or ▲ ◄ or ►	ENTER 01234 SECURITY 56789 CODE[ ] ENT
7. Press [Set/Lock] key.	SET / 🔒	ENTER 01234 SECURITY 56789 CODE[5] ENT
8. Repeat steps 6 and 7 to set remaining three code numbers. Example: 5246	. . . .	ENTER 01234 SECURITY 56789 CODE[5246] ENT
9. Select [ENT] by pressing the [Up], [Down], [Right], [Left] keys.	▼ or ▲ ◄ or ►	ENTER 01234 SECURITY 56789 CODE[5246] ENT

Procedure	Key operation	Display
10.Press [Set/Lock] key.	SET / 🔒	SET ↓ +00.000 %

* 1: The menu number is changed according to models.

7.3 Changing Company Name

The company name displayed during power-up can be changed.
The following characters can be used:
Numeric digits 0 to 9; capital letters A to Z; period; comma; apostrophe; space; opened and closed parenthesis.
Maximum of 32 characters can be input (2 lines of 16 characters each).

Procedure	Key operation	Display
1. Press [Menu mode] key.	MENU	MENU(1/5)*3 BEAM SETTING ▼
2. Press [Down] key three times.	▼ Three times	MENU(4/5)*3 ▲ SECURITY
3. Press [Set/Lock] key.	SET / 🔒	SECURITY(1/3) ▲ S CODE ON OFF ▼
4. Press [Down] key twice.	▼ Twice	SECURITY(3/3) ▲ CHANGE NAME
5. Press [Set/Lock] key.*1	SET / 🔒	COMPANY NAME ENTER NEW NAME ↓ _ _ _TOPCON_ _ _ _ _ _ _ _ _ _ _ _ _ ABCDEFGHIJ←→ENT

Procedure	Key operation	Display
6. Select a character string by pressing [Up] or [Down] keys.	▼ or ▲	=_ _ TOPCON _ _ _ _ _ _ _ _ _ _ _ _ ABCDEFGHIJ←→ENT KLMNOPQRST ←→ENT UVWXYZ. , ' _ ←→ENT ( ) 01234567 ←→ENT 89 ←→ENT
7. Select a character in the character string by pressing [Right] or [Left] keys. Example: LASER(1)	◄ or ►	=_ _ TOPCON _ _ _ _ _ _ _ _ _ _ _ _ KLMNOPQRST←→ENT
8. Press [Set/Lock] key.	SET / 🔒	L=_ _ TOPCON _ _ _ _ _ _ _ _ _ _ _ KLMNOPQRST←→ENT
9. Repeat procedures 6 and 8 until complete.*2 Using "_", erase the remaining characters, "CON".		LASER(1)CON _ _ _ _ _ _ _ _ _ _ _ ()01234567←→ENT
10. Select [ENT] by pressing the [Left] or [Right] keys.	◄ or ►	LASER(1)_ _ _ _ _ _ _ _ _ _ _ _ _ ()01234567←→ENT
11. Press [Set/Lock] key.	SET / 🔒	SET ↓ +00.000%

*1: When security code has been entered, but security mode is OFF, input of current security code is necessary to change security code.

*2: Follow the steps below if it's necessary to correct a character during input.

*3: The menu number is changed according to models.

■ How to correct a character

Procedure	Key operation	Display
1. Select the left or right arrow by pressing the [Left] or [Right] keys.	◄ or ►	LASOR(1) _ ()01234567 ←→ENT
2. Press [Set/Lock] key. The underline (cursor) moves to left or right by pressing the [Set/Lock] key.	SET / 🔒	LASOR(1) _ ()01234567 ←→ENT ↓ LASOR(1) _ ()01234567 ←→ENT
3. Select a character string by pressing the [Down] or [Up] keys.	▼ or ▲	LASOR(1) _ ABCDEFGHIJ ←→ENT
4. Select a character in the character string by pressing the [Left] or [Right] keys.	◄ or ►	LASOR(1) _ ABCDEFGHIJ ←→ENT
5. Press [Set/Lock] key. Repeat steps 1 and 5 to correct other characters.	SET / 🔒	LASER(1) _ ABCDEFGHIJ ←→ENT

8.1 Self-centering Feet

Four sets of centering feet are provided with the TP-L6W. The feet provided with TP-L6W will center the laser beam inside the following diameters of pipe:
150mm (6"), 200mm (8"), 250mm (10") and 300mm (12")
They can also be used to set laser on top of the pipe or on a flat surface.

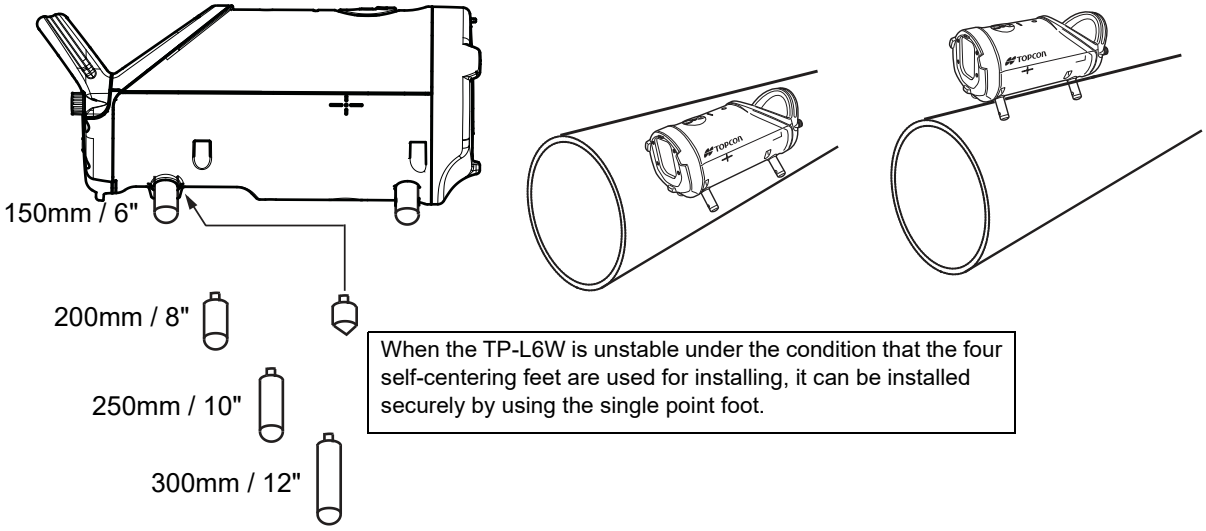

When the TP-L6W is unstable under the condition that the four self-centering feet are used for installing, it can be installed securely by using the single point foot.

Note

How to install the instrument to a pipe whose diameter is not 150mm (6"), 200mm (8"), 250mm (10") and 300mm (12") or on top of pipe

As shown below, use the self-centering feet for 200mm (8") on the TP-L6W and align the target (small) height with 200mm. Only under this condition, the laser center is set at the same height as the target center.

- To prevent the laser center from being deviated from the target center, position the bubbles of the digital level vial on the TP-L6W and those of the circular level vial on the target at the center.
- When the pipe diameter is one of 150mm (6"), 200mm (8"), 250mm (10") and 300mm (12"), use a self-centering feet exclusively for each diameter.

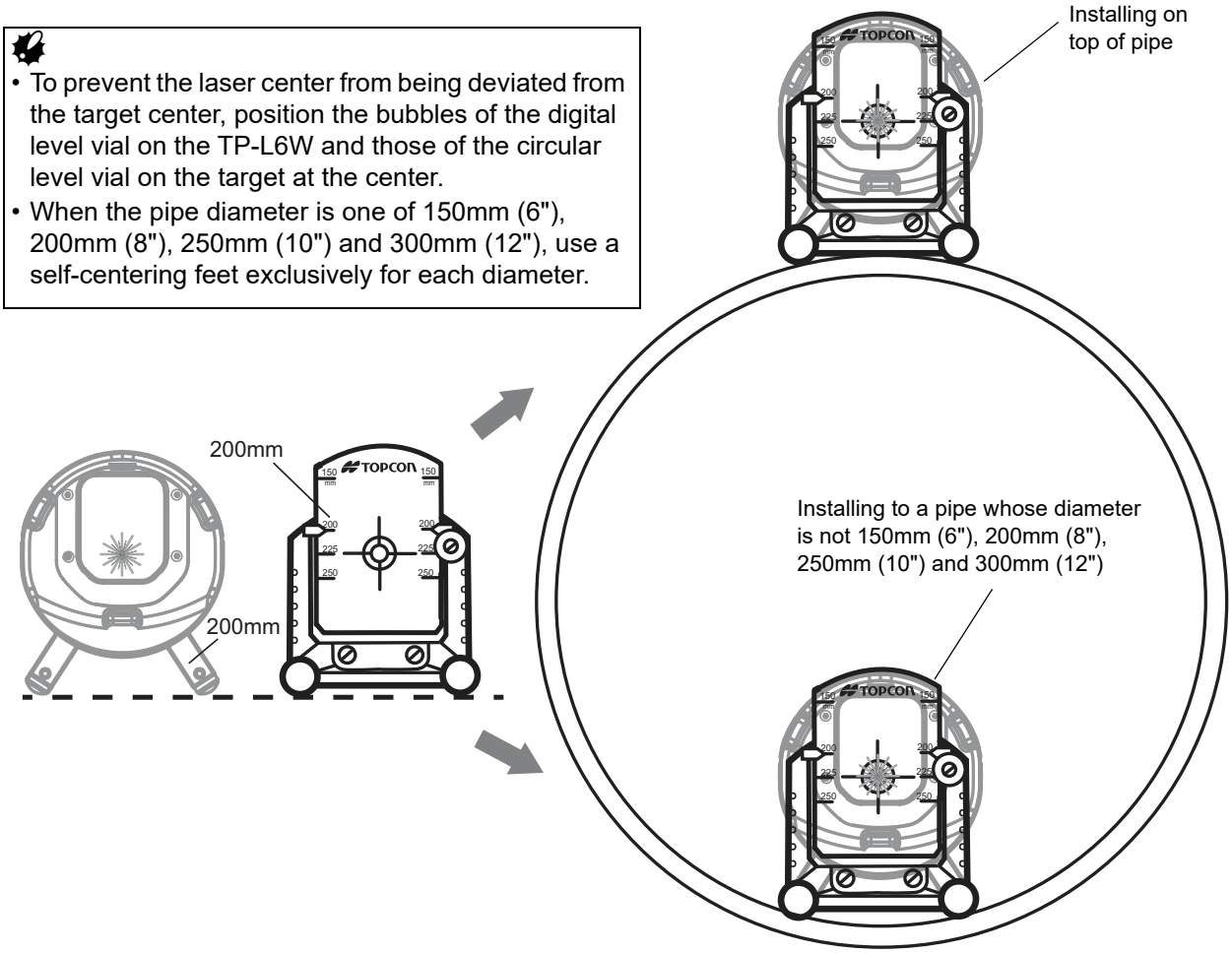

8.2 Remote Controller (RC-500)

The RC-500 allows you to remotely control most function of the TP-L6 as shown below.
The RC-500 is convenient for aligning the beam while using a transit, or for saving power by temporarily putting the unit in standby mode using the ON/OFF switch.

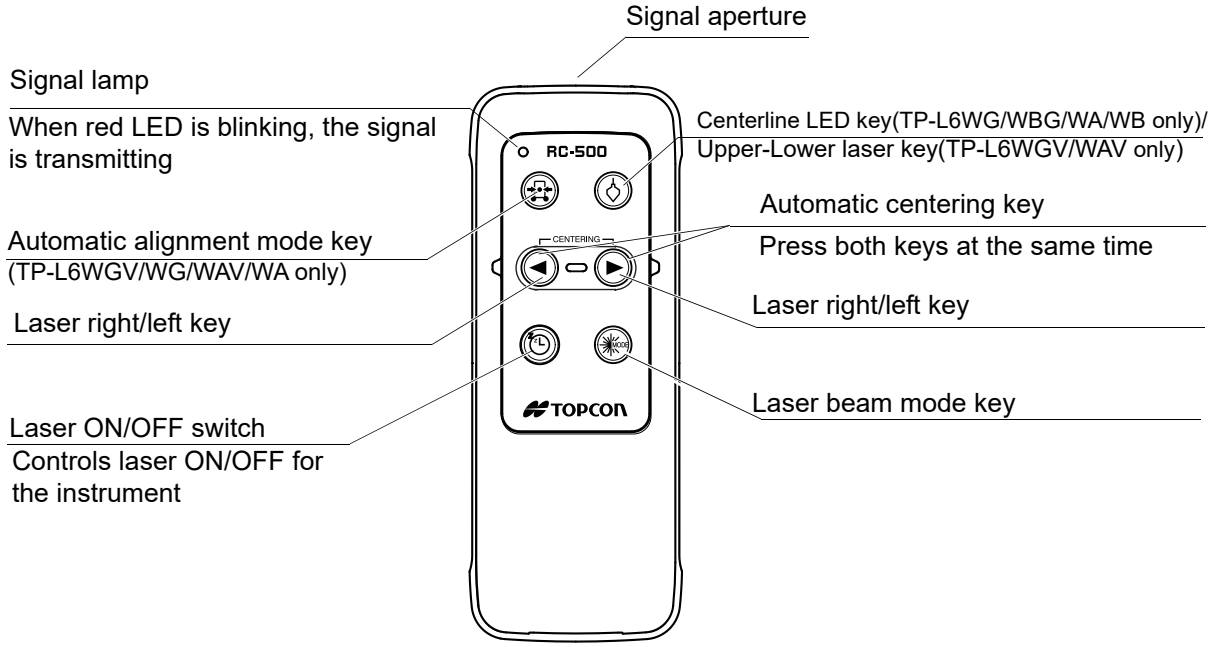

- Operating range by remote control:
  Approx.200 m (656 ft.) (Though the pipe from a forward position)
  Approx.25 m (82 ft.) (From above panel)

- The laser ON/OFF switch controls the laser beam only, not for the instrument. To turn power OFF to the instrument, be sure to switch OFF the instrument after operation is finished. When the laser is turned off by the laser ON/OFF switch, "STANDBY" is indicated on the display and the laser flashes once for five seconds (standby mode).

- RC-500 is a remote controller used exclusively for TP-L6W. You cannot operate any other instrument except TP-L6W through RC-500. You cannot operate TP-L6W through RC-200.
- To turn the laser beam ON again after the laser is turned off by the remote control, wait for 2 seconds or more and then press the laser ON/OFF switch for 2 seconds or more.
- Large atmospheric motions could shorten the operating range by the remote control.
  To prevent atmospheric motions from occurring, limit the working range within the shade or use a blower (commercially-available) for working.

- When using the remote controller, direct the signal aperture to the remote control receiving window on front of the TP-L6W.

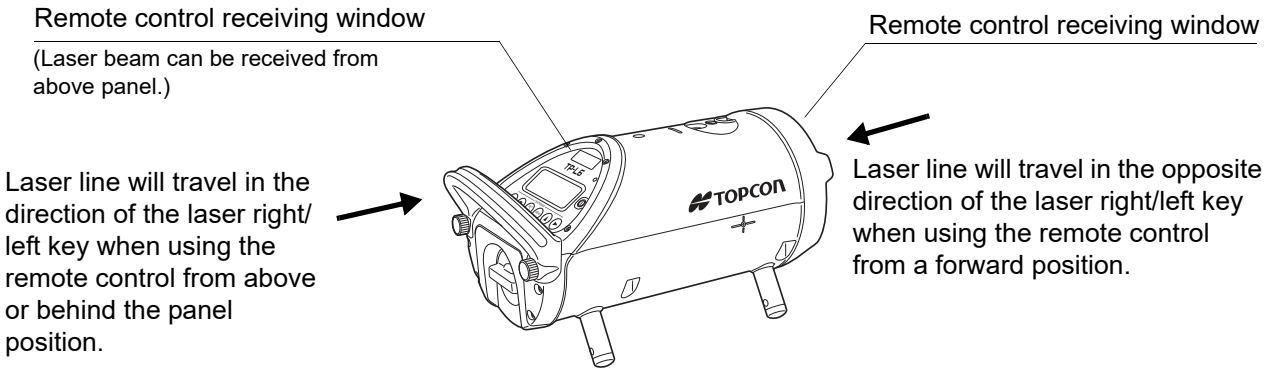

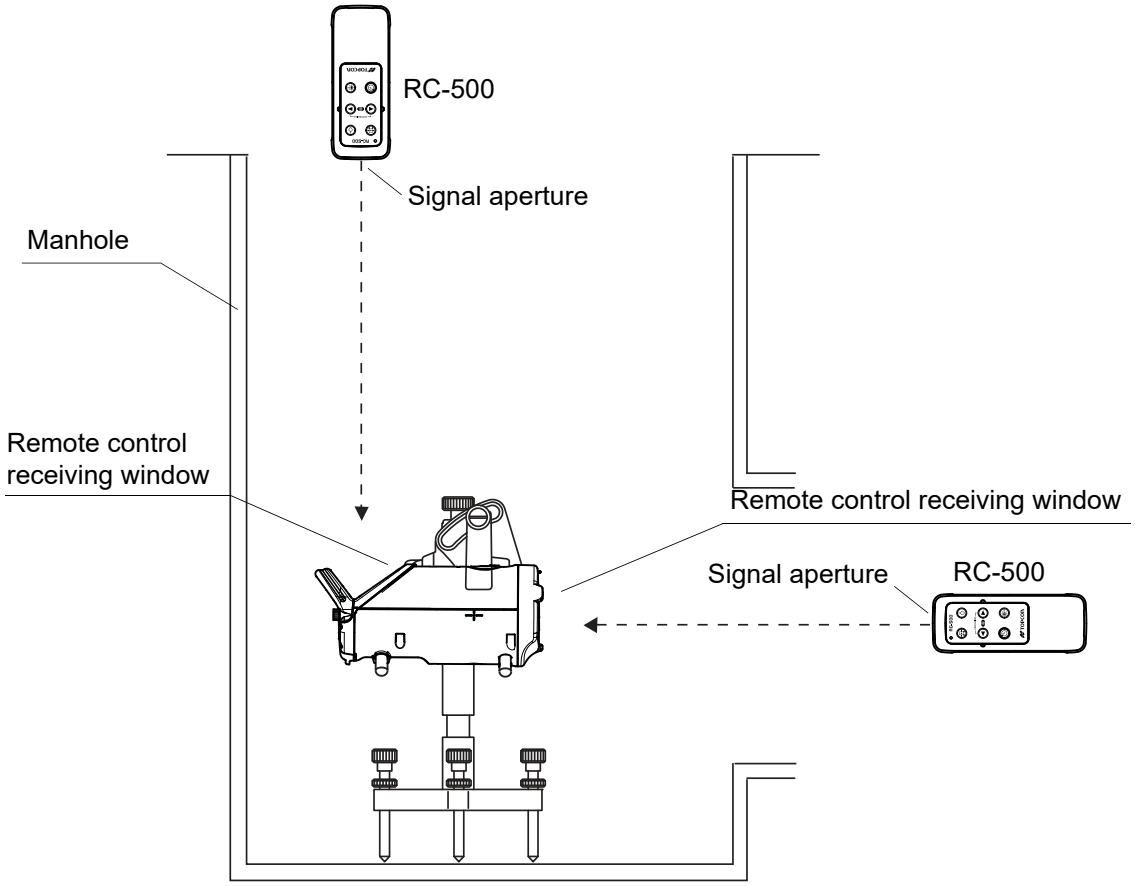

■ Replacing battery for Remote Controller RC-500

1. Open the battery cover.
2. Remove the old batteries and replace with new 2xAA size dry cell batteries making sure each is placed in the proper direction as indicated.
3. Shut the battery cover until click sound can be heard.

- Dry batteries are sold separately.
- Replace all 2 batteries with new ones at the same time.
- Insert the batteries in the battery box according to the appointed direction.
- Do not mix used and new batteries, and do not mix different types of batteries together.

8.3 Target

Select the size of target assembly appropriate for the pipe diameter.

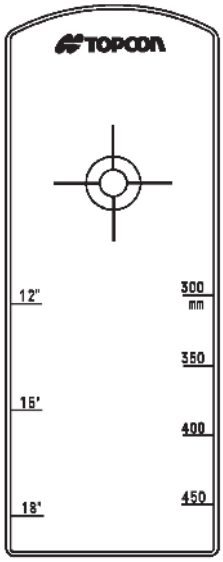

Target (L)

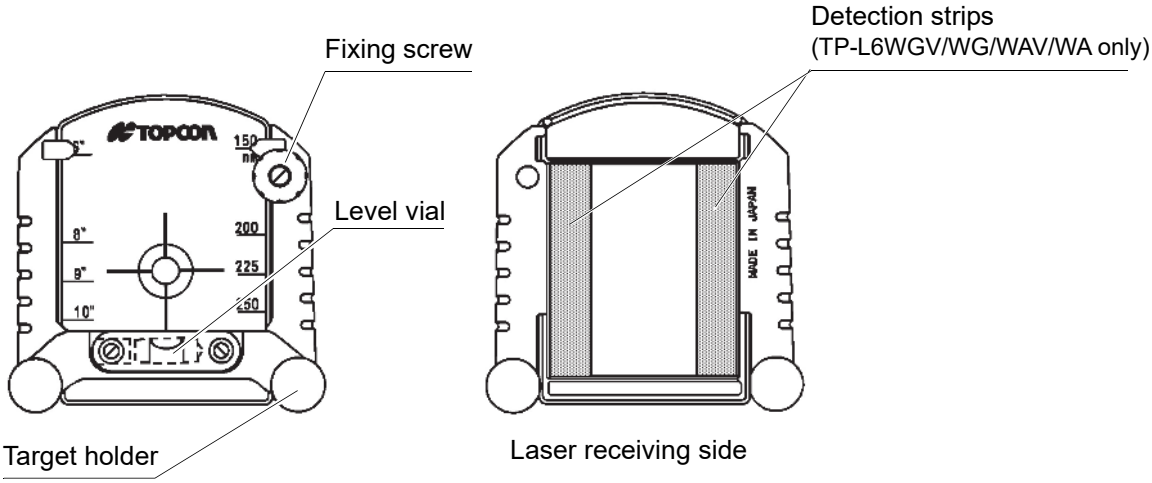

Target (S)

9.1 Procedure To Check and Adjust Laser Calibration

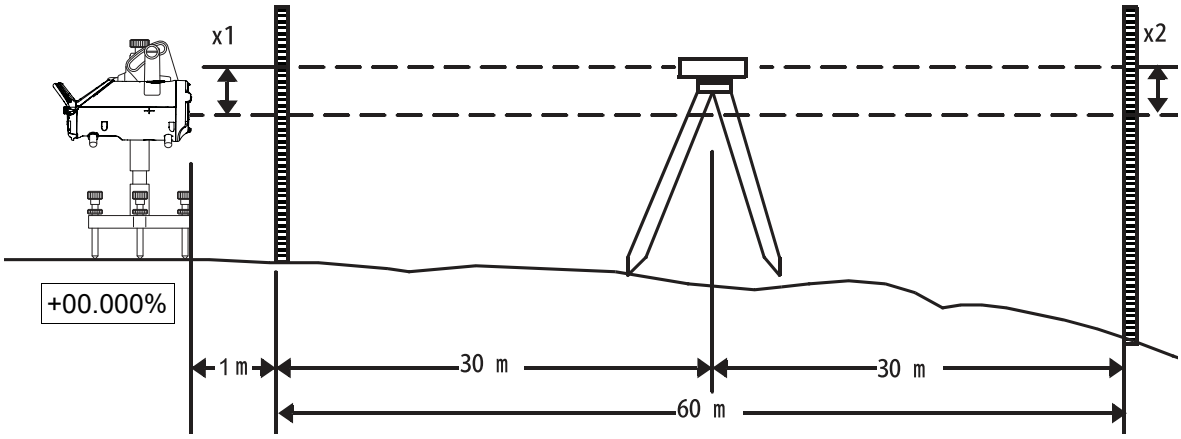

■ Checking Calibration

1. Make sure grade is set to 00.000% (0‰).
2. Locate control points directly beneath the laser beam 1m (3.3 ft) in front of the TP-L6W and 60m (197ft.) from the first control point (see illustration above).
3. Set up a transit or level midway between the 1st and 2nd control points.
4. Take elevation readings at both control points using the laser beam and the transit or level.
   If the distance between the readings at each point (x1 and x2) are the same, the unit does not need adjustment. If x1 and x2 are not the same, the unit requires adjustment as follows.

■ Adjusting Calibration

Procedure	Key operation	Display
1. When checking is finished, turn the power OFF.	Power OFF	
2. Press Power ON key while pressing and holding the [Set/Lock] key. "0 SET" is displayed.	SET / 🔒 +	0 SET
3. Press [Set/Lock] key. "INIT" is displayed, and then "LEVELING" is displayed.	SET / 🔒	INIT ↓ LEVELING ↓

Procedure	Key operation	Display
4. Adjust the height of laser beam x1 and X2 measurements are equal (use [Down] or [Up] key). • The display will be changed to "LEVELING" again if the instrument is moved. In this case, wait until the display changes to "LEVEL" and readjust the instrument.	▼ or ▲	LEVEL
5. Press [Set/Lock] key after completing the adjustment. "WAIT" is displayed.	SET / 🔒	WAIT ↓ +00000
6. When +00000 appears on the display, press the [Set/Lock] key again. Repeat checking procedure above to confirm accurate calibration.	SET / 🔒	END ↓ +000.00%

• If the adjustment range is exceeded, "E72" (error) will be displayed in step ***5***. Repeat checking and adjusting procedure. In this case, carry out checking and adjusting again.

9.2 Checking of Upper/Lower Laser (TP-L6WGV/WAV only)

1. Set up the instrument on a single control point using the lower laser.
2. Set up a target approximately 3m (10ft.) above the instrument.
3. Move the target above the manhole unit the upper laser is aligned to the center of the target.
4. Rotate the instrument 180° without changing lower laser line position.
   If the upper laser emitting position does not change more than 4mm, the unit is within specification.

• If the unit is out by more than 4mm (0.014’), please contact your local dealer.

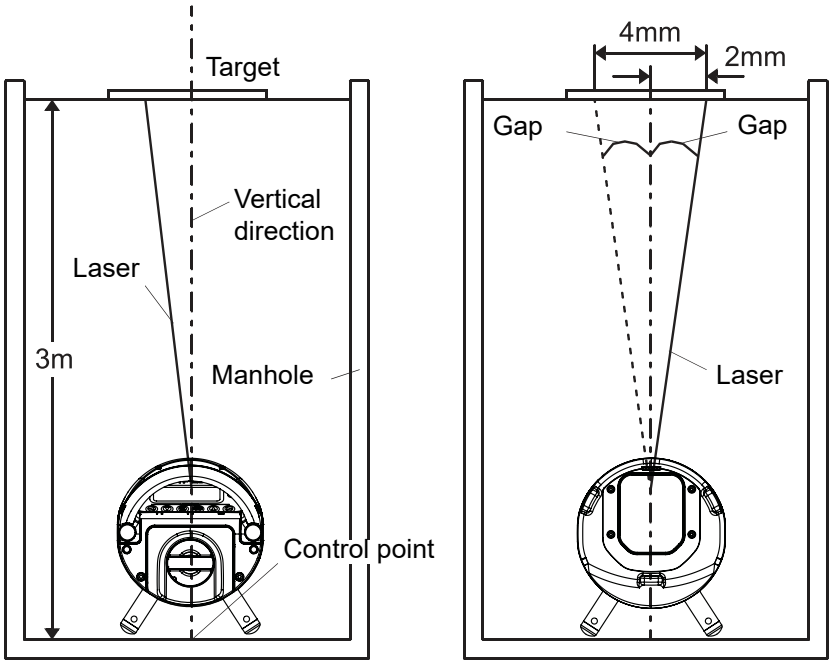

10.ERROR DISPLAYS

If an error is displayed, follow the procedures shown below.

Error Code	Contents	Countermeasure
E-02 E-03	Abnormal operation of internal measuring system.	Switch OFF the power, then ON again. Excessive vibration around the laser may cause this error. Eliminate vibration.
E-04	The angle is not measured properly.	Contact your local dealer.
E-05	The laser's positioning is not adjusted properly.	Switch OFF the power, then ON again.
E-72	Indicates excessive tilt of the laser instrument during calibration checking or adjusting.	Switch OFF the power, then ON again. Set the instrument level then repeat checking and adjusting calibration procedure.
E-99	Abnormal operation of internal memory system detected.	Switch OFF the power, then ON again.

• If error code remains after trying countermeasures above, please contact your Topcon dealer.

11.TROUBLESHOOTING

Check to see the instrument referring to the error list or the following troubleshooting list when you notice the failure of the instrument.
If the instrument can't be recovered or the failure isn't written in the following list, please contact your local dealer.

Conditions	Causes	Countermeasures
Laser beam does not emit	1) Battery level is low. 2) The laser is turned off because the laser ON/OFF switch of the remote controller is pushed.	1) Recharge or replace the batteries with new ones. 2) Push the laser ON/OFF switch of the remote controller, then the laser is turned on.
Laser beam blinks	1) When Level Warning Indicator blinks, the instrument is tilted beyond the self-leveling range (laser blinks slowly). 2) Any shock or vibration to the unit produces unstable condition causing beam to blink.	1) Reposition the instrument until the level warning indicator disappears. 2) Eliminate the source of disturbance to the unit.
Laser beam emits but grade setting is not possible	1) The instrument is in lock mode. 2) The value entered is out of the grade range. 3) When Level Warning Indicator blinks, the instrument is tilted beyond the self-leveling range (laser blinks slowly). 4) Battery level is low.	1) Press the [Set/Lock] key on the instrument to release the lock function. 2) Grade entry must be in the range of -15 to 40%. 3) Reposition the instrument until the level warning indicator disappears. 4) Recharge or replace the batteries with new ones.
Laser beam emits but line setting is not possible.	1) The instrument is in lock mode. 2) The laser beam has reached the limit of line adjusting range.	1) Press the [Set/Lock] key on the instrument to release the lock function. 2) Center the line adjustment and aim instrument so laser is roughly aimed at target.
Remote control does not function.	1) The instrument is in lock mode. 2) The battery power of remote control is low.	1) Press the [Set/Lock] key on the instrument to release the lock function. 2) Replace the batteries.
The laser beam is unstable.	1) The laser beam is refracted due to temperature differences within the pipe. 2) The laser beam is refracting and reflecting due to fog and/or mist.	1) When the pipe is laid, the trench must be backfilled immediately to help maintain temperature stability. 2) Use a blower (commercially-available) to move air through the pipe to blend the air and remove mist or fog. • Cover the pipe to prevent heat build up inside the pipe. • Clear the mist or fog.
The laser position shifts over time passed.	1) The pipe may be sinking. 2) The target is not securely held.	1) Confirm the pipe grade setting using a level. 2) Secure the target within its holder.

Conditions	Causes	Countermeasures
The grade setting value of the TP-L6W and the measured grade value are not equal.	1) Incorrect grade value was entered. 2) The bubble on the bubble tube display of the instrument or the bubble on the target was not adjusted correctly. 3) The laser beam is refracted due to temperature differences within the pipe.	1) Confirm the input value (‰ or %) and reset. 2) Adjust the laser and/or target so the bubble is centered. 3) When the pipe is laid, the trench must be backfilled immediately to help maintain temperature stability. Use a blower (commercially-available) to move air through the pipe to keep temperature and moisture stable.

12.OPTIONAL ACCESSORIES

- Battery holder DB-81
- Drop manhole kit model 6
- Single point foot model 2
- Trivet stand model 4
- Trivet handle model 2
- Tripod adapter model 3
- Scope model 2
- Over the top target

- Optional accessories which are sold separately may be subject to change or be discontinued without notice. Contact your local dealer for the details.

13.SPECIFICATIONS

TP-L6 series

Light source	Visible laser diode
Wave length	520nm (TP-L6WGV/WG/WBG, green)
	635nm (TP-L6WAV/WA/WB, red)
Laser power output	4.5mW (CW)
Laser class	Class 3R
Laser diameter	ø12mm (collimated)

(The laser relating specifications described above apply to the internal laser as well.)

Line control width	Approx. 17° ☞ Maximum line adjust range (p. 22)
Grade readout	-15 to 40%(-150 to 400‰)
Minimum setting of grade	0.001% (0.01‰)
Grade setting method	Absolute encoder
Auto leveling range	
Slope direction:	±10%
Axis direction:	Approx. ±4°
Horizontal accuracy	±10 arc seconds
Automatic alignment distance	5 to 150m(16 to 492ft)(TP-L6WGV/WG/WAV/WA)
Upper/Lower Laser (TP-L6WGV/WAV only)	
Light source	Visible laser diode
Wave length	655nm
Laser power output	Upper laser beam :1mW (maximum)
	Lower laser beam :1.2mW (maximum)
Compensating range	Grade setting direction Approx. ±4°
	Rotating direction Approx. ±2°
Vertical accuracy (Rolling direction)	
	Upper ±1.5'
	Lower ±3.5'
Bluetooth wireless communication*1 (TP-L6WGV/WG/WBG/WAV/WA/WB)	
Transmission method	FHSS
Modulation	GFSK
Frequency band	2.402 to 2.48GHz
Bluetooth profile	SPP, DUN
Power class	Class 1.5
Usable range	about 5 m (Changed depending on the used controller.) *2, *3
	(while in communication with the specified controller)
Authentication	Yes/No (selectable)

*1: *Bluetooth* function may not be built in depending on telecommunications regulations of the country or the area where the instrument is purchased. Contact your local dealer for the details.

*2: No obstacles, few vehicles or sources of radio emissions/interference in the near vicinity of the instrument, no rain.

*3: Usage range could be shorter depending on specifications of Bluetooth device to communicate.

Power source	Li-ion battery BDC72
Working duration at 20°C (68°F)	
TP-L6WGV/WG/WBG	about 45 hours
TP-L6WAV/WA/WB	about 60 hours
Nominal voltage	7.2 V
Capacity	5,986 mAh
Dimensions	40 (W) X 70 (D) X 40 (H) mm
Weight	About 220 g

- Battery using time will vary depending on environmental conditions and operations done with TP-L6W series.

Charger (CDC77)	
Input voltage	100 to 240 V AC
Charging time (at 25°C per battery)	
BDC72	About 8 hours (Charging may take longer than this at low or high temperature.)
Range of charging temperature	0 to 40°C (32 to 104 °F)
Range of storage temperature	-20 to 65°C (-4 to 149 °F)
Dimensions	94 (W) X 102 (D) X 36 (H) mm
Weight	About 250 g
Operating temperature range	-20 to 50°C (-4 to 122 °F)
Storage temperature range	-30 to 60°C (-22 to 140 °F)
Water resistance	IPX8 (IEC 60529:2001) (when the battery holder is attached)
Size	125mm X 250mm (without handle) 125mm X 280mm (with rear handle)
Weight	about 3.0kg (with BDC72)

Remote controller Model RC-500

Operating distance	Though the pipe from a forward position, about 200m (656ft.) From above panel, about 25m (82ft.)
Functions	Line control, Laser beam ON/OFF, Laser beam mode, Centerline LED, Upper/Lower laser switch, Automatic alignment mode, Line centering
Power supply	Two AA size dry batteries
Working duration at 20°C (68°F)	about 8 months (Using manganese dry batteries)
Water resistance	IPX6 (IEC 60529:2001)
Size	59(W) X 27(D) X 154(H)mm
Weight	about 170g (with batteries)

14.REGULATIONS

Region/ Country	Directives/ Regulations	Labels/Declarations
U.S.A.	FCC-Class B	**FCC Compliance** **WARNING:** Changes or modifications to this unit not expressly approved by the party responsible for compliance could void the user's authority to operate the equipment. **NOTE:** This equipment has been tested and found to comply with limits for a Class B digital device, pursuant to Part 15 of the FCC Rules. These limits are designed to provide reasonable protection against harmful interference in a residential installation. This equipment generates, uses, and can radiate radio frequency energy and, if not installed and used in accordance with the instructions, may cause harmful interference to radio communications. However, there is no guarantee that interference will not occur in a particular installation. If this equipment does cause harmful interference to radio or television reception, which can be determined by turning the equipment off and on, the user is encouraged to try to correct the interference by one or more of the following measures: - Reorient or relocate the receiving antenna. - Increase the separation between the equipment and receiver. - Connect the equipment into an outlet on a circuit different from that to which the receiver is connected. - Consult the dealer or an experienced radio / TV technician for help. **Means of conformity** This transmitter must not be co-located or operated in conjunction with any other antenna or transmitter. This equipment complies with FCC radiation exposure limits set forth for an uncontrolled environment and meets the FCC radio frequency (RF) Exposure Guidelines. This equipment has very low levels of RF energy that it deemed to comply without maximum permissive exposure evaluation (MPE). But it is desirable that it should be installed and operated keeping the radiator at least 20cm or more away from person's body.
California, U.S.A.	Proposition65	⚠ **WARNING:** This product can expose you to chemicals including Lead, which is known to the State of California to cause birth defects or other reproductive harm. For more information go to www.P65Warnings.ca.gov.

Region/ Country	Directives/ Regulations	Labels/Declarations
California, and NY, U.S.A.	Recycling Batteries	**DON'T THROW AWAY RECHARGEABLE BATTERIES, RECYCLE THEM.** **Topcon Positioning Systems Inc., United States Return Process for UsedRechargeable Nickel Metal Hydride, Nickel Cadmium, Small Sealed Lead Acid, and Lithium Ion, Batteries** In the United States Topcon Positioning Systems Inc., has established a process by which Topcon customers may return used rechargeable Nickel Metal Hydride(Ni-MH), Nickel Cadmium(Ni-Cd), Small Sealed Lead Acid(Pb), and Lithium Ion(Li-ion) batteries to Topcon for proper recycling and disposal. Only Topcon batteries will be accepted in this process. Proper shipping requires that batteries or battery packs must be intact and show no signs of leaking. The metal terminals on the individual batteries must be covered with tape to prevent short circuiting and heat buildup or batteries can be placed in individual plastic bag. Battery packs should not be dissembled prior to return. Topcon customers are responsible for complying with all federal, state, and local regulations pertaining to packing, labeling, and shipping of batteries. Packages must include a completed return address, be prepaid by the shipper, and travel by surface mode. **Under no circumstance should used/recyclable batteries by shipped by air.** Failure to comply with the above requirements will result in the rejection of the package at the shipper's expense. Please remit packages to: Topcon Positioning Systems, Inc. C/O Battery Return Dept. 150 7400 National Dr. Livermore, CA 94551 **DON'T THROW AWAY RECHARGEABLE BATTERIES, RECYCLE THEM.**
Canada	ICES-Class B	This class B digital apparatus meets all requirements of Canadian interference-Causing Equipment Regulations. Cet appareil numérique de la class B respecte toutes les exigences du Réglement sur le matérique brouilleur du Canada. This Class B digital apparatus complies with Canadian ICES-003 Cet appareil numerique de la Class B est conforme a la norme NMB-003 du Canada. This equipment complies with IC radiation exposure limits set forth for an uncontrolled environment and meets the RSS-102 of the IC radio frequency (RF) Exposure Guidelines. This equipment has very low levels of RF energy that it deemed to comply without maximum permissive exposure evaluation (MPE). But it is desirable that it should be installed and operated keeping the radiator at least 20cm or more away from person's body.

Region/ Country	Directives/ Regulations	Labels/Declarations
EU	EMC-Class B RE	**EMC NOTICE** In industrial locations or in proximity to industrial power installations, this instrument might be affected by electromagnetic noise. Under such conditions, please test the instrument performance before use. Hereby, TOPCON CORPORATION declares that the radio equipment type of this product is in compliance with Directive 2014/53/EU. EU declaration of conformity is available depending on your request. Contact your local dealer. **Manufacturer** Name: TOPCON CORPORATION Address: 75-1, Hasunuma-cho, Itabashi-ku, Tokyo, 174-8580 JAPAN **Europe Representative and Importer** Name: Topcon Europe Positioning B.V. Address: Essebaan 11, 2908 LJ Capelle a/d IJssel, The Netherlands
EU	WEEE Directive	**WEEE Directive** This symbol is applicable to EU members states only. Following information is only for EU-member states: The use of the symbol indicates that this product may not be treated as household waste. By ensuring this product is disposed of correctly, you will help prevent potential negative consequences for the environment and human health, which could otherwise be caused by inappropriate waste handling of this product. For more detailed information about the take-back and recycling of this product, please contact your supplier where you purchased the product or consult.
EU	EU Battery Directive	EU **EU Battery Directive** This symbol is applicable to EU members states only. Battery users must not dispose of batteries as unsorted general waste, but treat properly. If a chemical symbol is printed beneath the symbol shown above, this chemical symbol means that the battery or accumulator contains a heavy metal at a certain concentration. This will be indicated as follows: Hg: mercury(0.0005%), Cd: cadmium(0.002%), Pb: lead(0.004%) These ingredients may be seriously hazardous to human and the global environment.

TOPCON CORPORATION (Manufacturer)

75-1 Hasunuma-cho, Itabashi-ku, Tokyo 174-8580, Japan **https://www.topcon.co.jp**

Please see the following website for contact addresses.

GLOBAL GATEWAY **https://global.topcon.com**

©2020 TOPCON CORPORATION
ALL RIGHTS RESERVED

CONTRACTORS-TOOLS.COM

SURVEY EQUIPMENT AND SUPPLIES

AUTHORIZED TOPCON DISTRIBUTOR

Need one, or need a hand with yours?

We sell, ship and support these every week.

CALL	**1-877-866-5721**
WEB	**Contractors-Tools.com**
PRODUCT	**TP-L6 series pipe laser**

- Family owned and operated | Free shipping | Same-day shipping
- Real people who set these up - not a call centre

Experience the value of Great Customer Service!

Contractors-Tools.com | 1-877-866-5721