LP51, LP51G Laser Pointer

User Guide



SPECTRA PRECISION

spectraprecision.com



Basic Operation

1. Unlock the laser's compensator by sliding the switch to the LEFT.

NOTE: For added mechanism protection always lock the laser when not in use by sliding the switch to the RIGHT.

2. Press the POWER button - the Power On / Low Battery LED illuminates GREEN. When the unit is tilted out of its self-leveling range the laser beams will blink 2 times per second.

3. The laser can be taken out of automatic self-leveling mode and placed in MANUAL mode to perform slope work by locking the laser's compensator (slide the switch to the RIGHT). In MANUAL mode the Manual Mode / Compensator Lock LED will flash RED.

4. When the batteries need changed the Power On / Low Battery LED changes to RED.

5. To turn OFF the laser, Press the POWER button again.

Introduction

Thank you for choosing the Spectra Precision® LP51 or LP51G laser from the family of precision handheld lasers. This simple-to-use tool allows you to transfer points between the floor and ceiling and to establish 90° points for laying out wall lines
and putting up wall partitions. You can also use the laser for other applications where true plumb, square, and level setups are required.

Before using the laser, be sure to read this operator's manual carefully. Included in it is information about setting up, using, and maintaining the laser. Also included in this manual are CAUTIONS and Notes. Each of these words represents a level or danger or concern. A CAUTION indicates a hazard or unsafe practice that could result in minor injury or property damage.
A Note indicates important information unrelated to safety.

Your comments and suggestions are welcome; please contact us at:

Spectra Precision
3265 Logistics Lane, Suite 200
Dayton, Ohio 45377 U.S.A.
Phone: (888) 527-3771
www.spectraprecision.com

Applications

General Leveling and Aligning



1. Place the laser on a flat surface. The laser must be level within its self-leveling range.

2. Adjust the position of the beams so they are at the desired positions.

3. Mark the position of the wall, elevation, floor or ceiling.

Installing and Plumbing a Wall

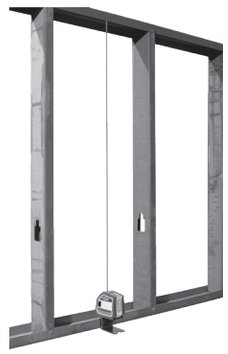

1. Place the laser so the Plumb-Down Beam is positioned over the desired wall location.

NOTE: If the floor track is already installed the laser should be placed on the Mounting Bracket (0002-3470) to clear the floor track and to position the Plumb-Down Beam over the edge of the track. Magnets are provided on the Mounting Bracket to hold the assembly to the floor track if desired.

2. Use the Plumb-Up Beam to position the top track.

Features

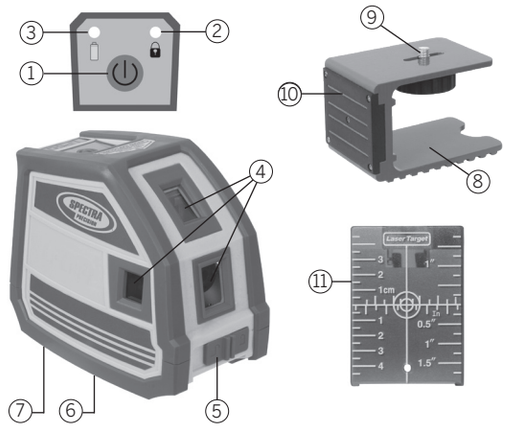

1. Power button
2. Manual Mode / Compensator Lock On LED
3. Power On / Low Battery LED
4. Laser Exit Windows
5. Compensator Lock / Manual Mode Switch
6. ¼ x 20 Mounting Thread
7. Battery Door
8. Mounting Bracket (1213-0100)
9. ¼ x 20 Mounting Knob – Sliding
10. Magnets
11 Ceiling / floor target
LP51 - Red (23416)
LP51G - Green (1215-1560)

1 m (4 ft) Marks

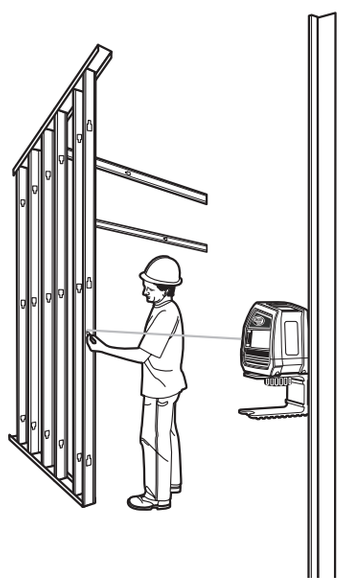

Installing/Removing the Batteries

CAUTION: The batteries should be removed when storing the laser more than 30 days.



1. Low Battery is indicated by the Power On / Low Battery LED changing from GREEN to RED.

2. Release the battery door latch using your fingers, a coin, or a screwdriver. Open the door.

3. Install/remove the AA batteries.

NOTE: When installing the batteries, be sure to note the positive (+) and negative (-) diagrams molded on the battery housing.

4. Close the battery door and latch it shut.

Battery Disposal

Some areas have regulations regarding the disposal of batteries. Be sure to dispose of discharged batteries properly.

Over Tall Floor Track or Obstacles with U-Mount

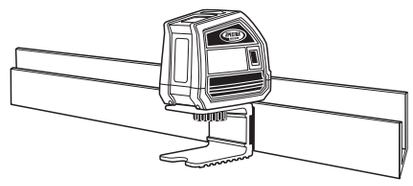

Elevations with ¼ x 20 Tripod Mount



Specifications

Level & Up Beam Accuracy [1,2]	± 3 mm @ 10 m (± 3/16 in. @ 50 ft)
Down Beam Accuracy [1,2]	± 4 mm @ 10 m (± 1/4 in. @ 50 ft)
Square Beam Accuracy [1,2]	± 3 mm @ 10 m (± 3/16 in. @ 50 ft)
Self-Leveling Range	±4° from level
Out-of-Level Indicator	Beam flashes
Working Range 3	LP51: Up to 30 m (100 ft) LP51G: Up to 35 m (115 ft)
Laser Class	LP51 - 3R, 3A LP51G - 2
Laser Type	520 -635 nm
Beam Shape	Square
Battery Type	2 AA alkaline
Battery Life [1]	LP51 - 20 hrs; LP51G - 10 hrs
Low Battery Indicator	Power/Low Battery LED changes to Red
Manual Mode and Compensator Lock Indicator	LED On and beam flashes
Operating Temperature Range	–10 °C to 45 °C (14 °F to 113 °F)
Size H x L x W	90 x 104 x 61 mm (3.54 x 4.09 x 2.40 in.)
Weight	0.31 kg (0.69 lb)

1) at 21° C (70° F)
2) along the axis
3) depending on ambient conditions

Maintenance and Care

You will get years of service from your laser by following the maintenance and care recommendations in this manual. However well the product is designed, mishaps do occur and the most common problems associated with these are covered in the following areas. Any damage to the laser caused by improper maintenance and care voids the warranty.

Handling Precautions

When transferring the laser from a very low temperature to a warmer environment or visa versa, always allow time for the laser to reach the new temperature before using. Allowing this time is especially important when transferring the laser from an extremely heated/cold vehicle to the job site.

System Cleaning

For maximum performance and accuracy always keep the lenses clean. When cleaning, apply very light pressure and use only a good quality glass cleaner on a soft cloth to clean the exterior of the laser and its lenses.

CAUTION: A dry cloth or abrasive organic cleaner could scratch or damage these surfaces.

CAUTION: Do not submerge the laser.

Storage

When you're not using the laser, store it in its pouch/carrying case.

CAUTION: Do not store the laser in a wet pouch/carrying case.
If the pouch/carrying case gets wet, let it dry before storing the laser in it.

CAUTION: The batteries should be removed when storing the laser more than 30 days.

Battery Disposal

Some states and local areas have regulations regarding the disposal of batteries. Be sure to dispose of discharged batteries properly.

CONTRACTORS-TOOLS.COM
SURVEY EQUIPMENT AND SUPPLIES

1-877-866-5721

Contractors-Tools.com

Spectra PRECISION

Authorized Spectra Precision Dealer

Calibration

Before each use, be sure to check the pocket laser for signs of damage. If the laser has been dropped or subjected to other rough treatment, it should be checked for accuracy.

Checking Accuracy—Plumb

1. Press the power button.

2. Place the laser so that its down beam is over a reference mark on the floor.

3. Locate the position of the up beam on the ceiling and make a mark.



4. Rotate the laser 180° and realign the down beam over the reference mark on the floor.

5. Locate the position of the up beam on the ceiling, which will be twice the actual error, and make a mark.

6. Measure the difference between the two marks on the ceiling, which will be twice the actual error. If the difference is more than 6 mm in 10 m (1/4 inch in 30 ft), the laser must be serviced at an authorized service center.



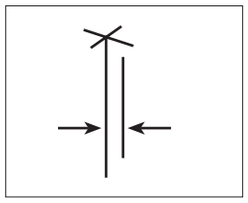

Difference
> 6 mm (> 1/4 in)

Checking Accuracy—Level

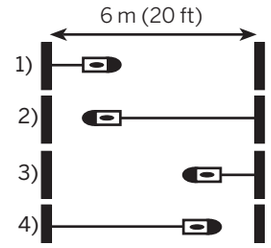

1. In an area with at least 6 m (20 ft) between two parallel walls, place the laser 50–75 mm (2–3 in.) from one wall, facing the wall.
2. Press the power button.
3. Locate the position of the level beam on the wall and make a mark.
4. Rotate the laser 180° so that the laser faces the other wall.
5. Locate the position of the level beam on the wall and make a mark.
6. Move the laser to the far wall, facing the wall.

7. Adjust the laser's height until the beam is superimposed over the mark made in step 5.

8. Without changing the height of the laser, rotate it 180° to place the beam near the mark on the first wall (step 3).

9. Measure the vertical distance between the beam and the mark made in step 3. If the measurement is greater than the values shown below, the laser must be serviced at an authorized service center.

Distance Between Walls	Measured Value
6 m (20 ft)	3.0 mm (1/8 in.)
12 m (40 ft)	6.0 mm (1/4 in.)
18 m (60 ft)	8.0 mm (5/16 in.)
24 m (80 ft)	11.0 mm (7/16 in.)

Checking Level to Square Beam 90° Calibration

Refer to the graphic for the location of the laser at each step and for the location of the marks made at each step. All marks can be made on the floor by placing a target in front of the level or square beam and transferring the location to the floor.

1. Find a room at least 10 m (35 ft) long. Mark a point (A) on the floor at one end of the room.
2. Set up the laser so that its down beam is over point A. Make sure the level beam points toward the far end of the room.
3. Mark a point (B) on the floor at the center of the room using a target to transfer the level beam location to the floor.
4. Mark a point (C) on the far wall or transfer the level beam location to the floor.

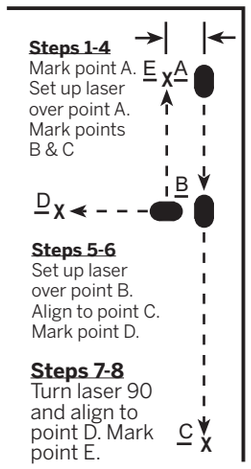

5. Move the laser to point B and align the level beam to point C again.
6. Mark the location of the square beam (D) on the floor.

   Note: To ensure accuracy, the distances from A to B, B to C, and B to D should be equal.
7. Turn the laser 90° so that the level beam aligns with point D.
8. Mark the location of the square beam (E) on the floor as close as possible to point A.
9. Measure the distance between points A and E. If the measurement is greater than the values shown below, the laser must be serviced at an authorized service center.

Room length od distance points A and C	The 90º angle between the level beam and square beam is out of calibration if the distance between points A and C is:
10 m (35 ft)	> 9.0 mm (3/8 in)
20 m (70 ft)	> 18.0 mm (3/4 in)

Request for Service

Our goal is to provide prompt and efficient service through competent service dealers. To locate your local dealer or authorized Spectra Precision Service Center, contact our world centers listed below.

Americas
Spectra Precision
3265 Logistics Lane, Suite 200
Vandalia, Ohio 45377
U.S.A.
(888) 527-3771 (Toll Free)

Europe, Africa & Middle East
Spectra Precision
(Kaiserslautern) GmbH
Am Sportplatz 5
67661 Kaiserslautern
GERMANY
Tel +49-(0)6301-71 14 14

Protecting the Environment

The unit, accessories and packaging ought to be recycled.

All plastic parts are marked for recycling according to material type.

Do not throw used batteries into the garbage, water or fire. Remove them in compliance with environmental requirements.

Laser Safety

Use of this product by people other than those trained on this product may result in exposure to hazardous laser light.

- Do not remove warning labels from the unit.
- LP51G is a Class 2 laser product (< 1mW; 520-635 nm).
- LP51 is Class 3A/3R (< 5mW; 635 nm).
- Never look into the laser beam or direct it to the eyes of other people.
- Always operate the unit in a way that prevents the beam from getting into people's eyes.

LP51 NOTE: It is required to post a Laser Safety Sign and to read, sign and carry a Laser Operator's Card when this laser is operated in public places.
To download and print the required materials please visit our website at spectraprecision.com





Warranty

Spectra Precision LLC warrants the LP51 and LP51G to be free of defects in material and workmanship for a period of three years. Spectra Precision LLC or its authorized Dealer or service center will repair or replace, at its option, any defective part, or the entire product, for which notice has been given during the warranty period. This warranty period is in effect from the date the system is delivered by Spectra Precision LLC or its authorized Dealer to the purchaser, or is put into service by a Dealer as a demonstrator or rental component.

Spectra Precision LLC or its Authorized Service Center will repair or replace, at its option, any defective part or components of which notice has been given during the warranty period.

Customers should send products to the nearest Authorized Factory, Dealer, or Service Center for warranty repairs, freight prepaid. In countries with Spectra Precision LLC Service Subsidiary Centers, the repaired products will be returned to the customer, freight prepaid.

Any evidence of negligent, abnormal use, accident, or any attempt to repair equipment by other than factory-authorized personnel Spectra Precision LLC certified or recommended parts, automatically voids the warranty.

Special precautions have been taken to ensure the calibration of the laser; however, calibration is not covered by this warranty. Maintenance of the calibration is the responsibility of the user.

The foregoing states the entire liability of Spectra Precision LLC regarding the purchase and use of its equipment. Spectra Precision LLC will not be held responsible for any consequential loss or damage of any kind.

This warranty is in lieu of all other warranties, except as set forth above, including an implied warranty merchantability of fitness for a particular purpose, is hereby disclaimed. This warranty is in lieu of all other warranties, expressed or implied.

Spectra Precision
3265 Logistics Lane, Suite 200
Dayton, Ohio 45377
U.S.A.
www.spectraprecision.com

N324
© 2023, Spectra Precision LLC. All rights reserved.
Reorder PN 1213-2030 Rev. C (04/23)

CONTRACTORS-TOOLS.COM
SURVEY EQUIPMENT AND SUPPLIES

1-877-866-5721

Contractors-Tools.com

Authorized Spectra Precision Dealer