CONTRACTORS-TOOLS.COM
SURVEY EQUIPMENT AND SUPPLIES

AUTHORIZED DAVID WHITE DEALER

David White LT8-300 Series Level-Transit Owner's Guide

Manufacturer documentation

Sold, shipped and supported by Contractors-Tools.com
Family owned and operated | Free shipping | Same-day shipping
Real people who set these up - not a call centre

1-877-866-5721

Contractors-Tools.com

Experience the value of Great Customer Service!

Contractors-Tools.com | 1-877-866-5721

David White®

LT8-300 Series Owner's Guide

LT8-300
LT8-300P
LT8-300LP

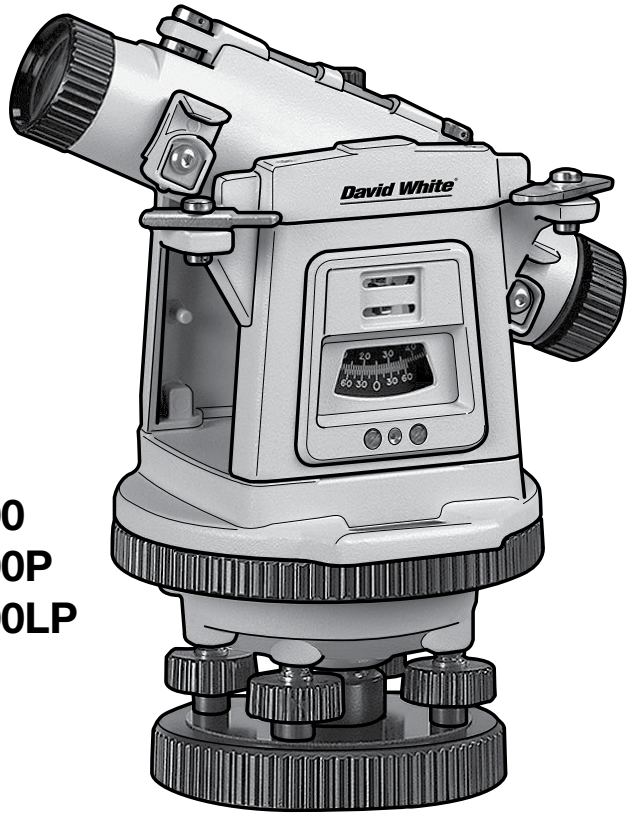

FOR CUSTOMER SERVICE, PARTS AND REPAIR CALL

(765) 581-4097

www.davidwhite.us.com

IMPORTANT:	IMPORTANT :	IMPORTANTE:
Read Before Using	Lire avant usage	Leer antes de usar

With David White your sights are set on precision and accuracy.

Congratulations! You've purchased a David White builder/contractor instrument, known throughout the world for precision and accuracy.

The purpose of this user's guide is to acquaint you with the instrument, its components, safety, proper care and handling.

Our levels, level-transits and transits are constructed to withstand extremely rugged field use. Like all precision instruments, however, they should be treated with reasonable care to prolong life and accuracy.

All instruments are adjusted when they are shipped from the factory. It is the customer's responsibility to check and to ensure instruments are adjusted prior to using.

David White is not responsible for errors caused by instruments that are out of adjustment.

Contact your distributor, dealer or David White for information on the nearest facility to check if your instrument is properly adjusted.

All specifications are subject to change without notice.

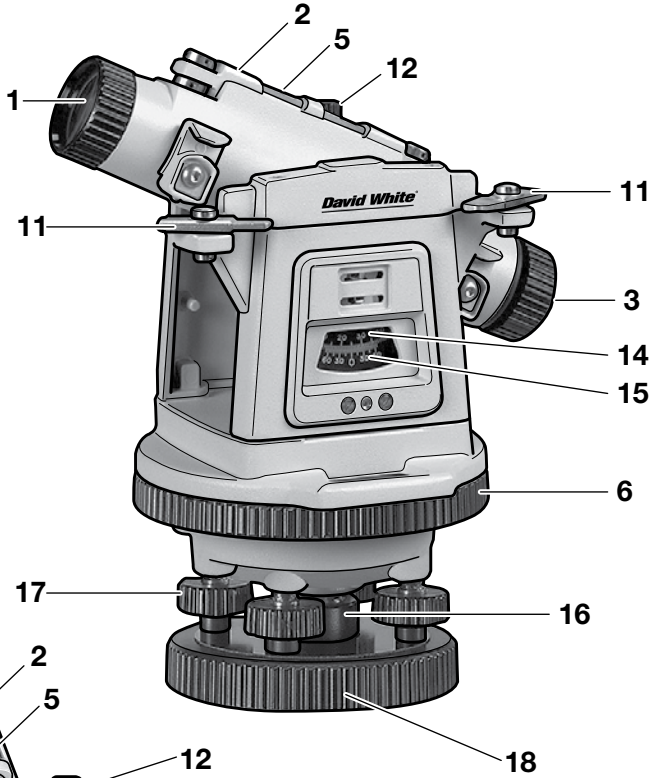
2
5
12
1
11
11
3
14
15
6
17
16
18

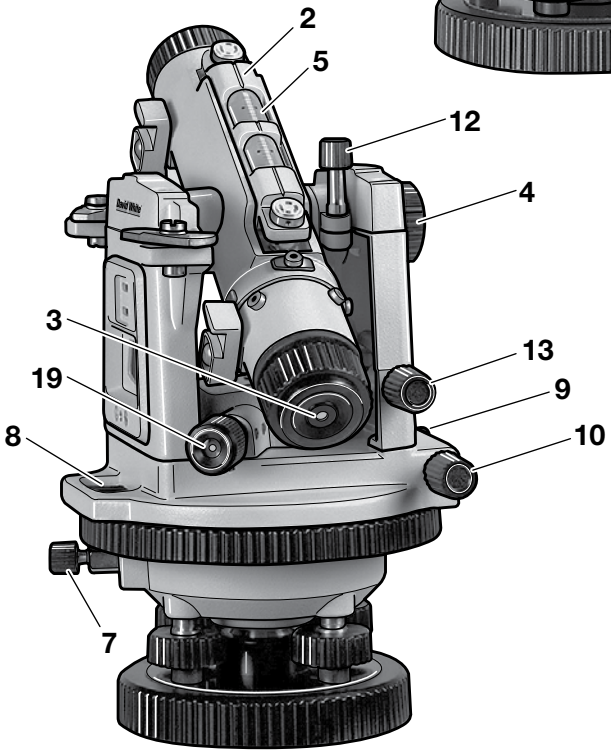
2
5
12
4
3
13
19
9
8
10
7

GENERAL SAFETY RULES

⚠ WARNING **Read all instructions. Failure to follow all instructions listed below may result in serious injury.**

⚠ WARNING **When moving a tripod-mounted instrument, handle with care. Carry only in an upright position. Do not carry over your shoulder or in a horizontal position.** Improper handling may result in instrument damage

Handle the instrument by its base when removing from the case or attaching to a tripod.

Never use force on any parts of the instrument. All moving parts will turn freely and easily by hand.

Check the leveling and indication accuracy of the instrument each time before using and after longer transport of the instrument.

Protect the instrument against moisture and direct sun light.

Do not subject the instrument to extreme temperatures or variations in temperature. As an example, do not leave it in vehicles for long time. In case of large variations in temperature, allow the instrument to adjust to the ambient temperature before putting it into operation. In case of extreme temperatures or variations in temperature, the accuracy of the instrument can be impaired.

Avoid any impact to or dropping of the instrument. After severe exterior effects to the instrument, it is recommended to carry out an accuracy check each time before continuing to work.

Place the instrument in the provided case when transporting it over larger distances (e.g. in the car). Ensure that the instrument is correctly placed in the transport case. When placing the instrument in the case.

When carrying instrument, always remove the instrument from the tripod when transporting or carrying it at the jobsite. If the instrument must be carried on the tripod, hold the instrument as vertically as possible and keep it in front of you. Never carry the instrument horizontally over your shoulder.

When transporting instrument long distances, always place in the carrying case.

SAVE THESE INSTRUCTIONS

INTENDED USE

The instrument is intended for determining and checking precise horizontal partitions. It is also suitable for measuring heights, distances and angles.

FEATURES

The numbering of the product features shown refers to the illustration of the instrument on the graphic page.

1. Telescope objective lens
2. Sighting notches
3. Eyepiece
4. Focusing Knob
5. Instrument level vial levers (2)
6. Horizontal circle
7. Horizontal circle lock
8. Horizontal vernier
9. Horizontal clamp
10. Horizontal tangent
11. Telescope lock
12. Vertical clamp
13. Vertical tangent circle
14. Vertical arc
15. Vertical vernier
16. Shifting center
17. Four leveling screws
18. 5/8-11 thread base
19. Plummet (LT8-300P/LT8-300LP)

TECHNICAL DATA

LT8-300 Series	
RANGE:	Up to 400 ft.
ACCURACY:	within 3⁄16 in at 150 ft (5 mm at 45 m)

TELESCOPE	
Length	8-1/2 in (216 mm)
Minimum focus	6 ft (1.8 m)
Aperture	1.257 in (32 mm)
Power	26X
Field of view	1' 9" @ 100 ft (54 cm @ 30 m)
No. of lenses	8
Stadia Ratio	1:100

HORIZONTAL CIRCLE	
Graduation diameter	4-5/8 in (117 mm)
Graduations	Each 1°
Numbers	Each 10°, 0-90-0°
Vernier	Double direct to 5 min.

LT8-300 Series	
VERTICAL ARC	
Graduations	Each 1°
Numbers	Each 10°, 45-0-45°
Vernier	Double direct to 5 min.
CENTER	
Type	Wide-stance dual row ball bearings
LEVEL VIAL	
Accuracy	110-120 sec. per 2 mm
PLATE VIAL	
Accuracy	360 sec. per 2.5 mm
WEIGHT	
Instrument only	9.5 lb (4.31 kg)
TRIPOD	
Type	Use a heavy-duty 5/8-11 tripod

GENERAL DESCRIPTION

Telescope

The telescope **1** provides a sharp image magnified 26 times. This means the object sighted appears 26 times closer than it would with the naked eye.

Sighting and Focusing

The vial notches **2** are used for preliminary sighting. To focus on an object, sight through the eyepiece **3** and bring the crosshairs into focus by turning the eyepiece cap **3**. After the crosshairs are sharp and distinct, look through the eyepiece at the object and turn the focusing knob **4** until the object appears sharp and clear.

All focusing is internal. The telescope does not move outward or inward as objects are focused. David White Universal instruments utilize the smooth precision of a rack and pinion mechanism for focusing.

Focus range is from six feet to infinity. For closer focus, turn the knob clockwise. For farther focusing, turn counterclockwise.

Leveling Vial

The instrument leveling vial **5** is factory aligned and is graduated to facilitate centering the bubble.

Horizontal Measuring

The horizontal circle **6** can be rotated for easy angle setting and reading and is divided in quadrants (0-90°). The circle is marked by degrees and numbered every 10 degrees.

The horizontal circle lock **7** assures accuracy by preventing the horizontal circle form being moved accidentally. Turn clockwise to tighten.

The horizontal vernier **8** permits dividing whole degrees into fractions of 1⁄12° (5 minutes).

Approximate horizontal sightings are held firmly in place by means of a clamp **9**.

Then, precise horizontal settings can be made with the tangent **10**. The clamp must be hand tightened firmly before the tangent will function.

The telescope moves up and down 45 degrees, and rotates 360 degrees, to measure vertical and horizontal angles.

When using instrument as a level, both telescope lock levers **11** must be in a closed position when the instrument is to be used as a level; open when used for vertical sightings.

Vertical Measuring

The vertical clamp **12** holds the telescope at a vertical angle. Fine vertical settings can be made with the tangent **13**. The vertical clamp must be hand tightened firmly before the tangent will function.

The vertical arc **14** is divided in degrees and numbered every 10 degrees up to 45 degrees, for both upward and downward angles.

A vertical vernier **15** permits dividing whole degrees into 5-minute increments.

Shifting Center

The shifting center **16** facilitates accurate placement of the instrument over a point. Four screws **17** are used for leveling the instrument. The instrument is mounted to the tripod by screwing the 5/8-11 base to the tripod head.

PREPARATION

The LT8-300LP is equipped with a laser plummet and requires a CR2 lithium battery.

Inserting/Replacing the Battery

Always turn off the laser plummet before removing and replacing batteries. CR2 lithium battery is recommended for the instrument.

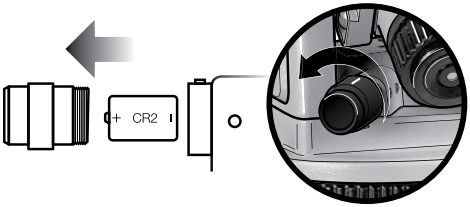

To open the battery compartment **19**, unscrew the cap. Insert the battery.

Insert battery using correct polarity as illustrated.

When the battery becomes weak, the brightness of laser plummet beam will weaken.

Remove the battery from the tool when not using it for extended periods. When storing for extended periods, the batteries can corrode and discharge themselves.

ACCURACY CHECK

IMPORTANT **Read this before using the instrument.**

This quality David White instrument has been inspected twice for accuracy before leaving the factory. The instrument has also been given the best protection possible against damage during transportation. Even with these precautions, the instrument is subject to rough handling during shipment. To protect yourself against the possibility of using an instrument which is out of adjustment, we suggest that you have the instrument checked by a competent person before using it.

The following test can be performed to check the instrument's accuracy.

Set up the instrument in an area that is a level as possible and is about 200-ft (60m) in length. Place two matching level rods (or drive two pieces of strapping into the ground) about 200-ft (60m) apart with the faces toward each other. Position and level the instrument so that the distance from the instrument to each rod is the same measure.

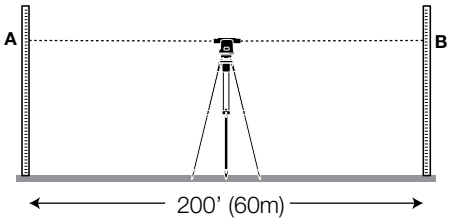

Take a reading on each rod with the instrument where the crosshair is sighted. Note the difference and record them.

Next, move the instrument to another point in line with the two level rods.

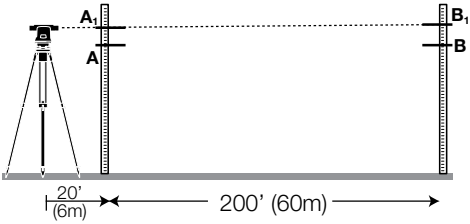

Level the instrument and take readings on the two level rods. The difference should be the same (**A** - $\mathbf{A_1}$ should equal **B** - $\mathbf{B_1}$). The difference between **A** - $\mathbf{A_1}$ and **B** - $\mathbf{B_1}$ is the instrument error at 200-ft (60m).

Correction of instrument error should be performed by an Authorized Service Technician. The instrument should be rechecked periodically to assure continued accuracy.

OPERATION

Initial Operation

⚠ WARNING Protect the instrument against moisture and direct sun light.

Do not subject the instrument to extreme temperatures or variations in temperature. As an example, do not leave it in vehicles for long time. In case of large variations in temperature, allow the instrument to adjust to the ambient temperature before putting it into operation. In case of extreme temperatures or variations in temperature, the accuracy of the instrument can be impaired.

Avoid heavy impact or falling of the instrument. After heavy exterior impact on the instrument, an accuracy check should always be carried out before continuing to work.

Setting Up Instrument

⚠ WARNING It is important that the tripod is set up firmly. Make sure that the tripod points are well into the ground. On paved surfaces, be sure the points hold securely.

The legs should have about a 3-1/2 foot spread, positioned so the top of the tripod head appears level.

If using a tripod with adjustable legs, be sure the leg clamps are securely hand tightened.

Before setting up your instrument, be sure clamps are loosened and both telescope lock levers are in the closed position.

Attach the instrument to the tripod securely, hand tightening the instrument base to the 5/8-11 tripod head.

Setting Up Over a Point

⚠ WARNING Never use force on any parts of the instrument.

All moving parts will turn freely and easily by hand.

Hang the plumb bob (LT8-300), attach cord to the plumb bob hook of the tripod.

The LT8-300P is equipped with an optical plummet. The LT8-300LP is equipped with a laser plummet.

This eliminates the need to use a plumb bob. The instrument is set up over a reference point by looking through an eyepiece and optically lining up over the point (LT8-300P) or using the laser plummet beam (LT8-300LP).

Move the tripod and instrument over the approximate point. (Be sure the tripod is set up firmly again. Loosen leveling screws and shift the instrument laterally until the instrument is positioned directly over the point.

Positioning LT8-300P Directly Over Point

When looking through the eyepiece **19** the light path is reflected through center of the instrument to the reference point (a stake on the ground).

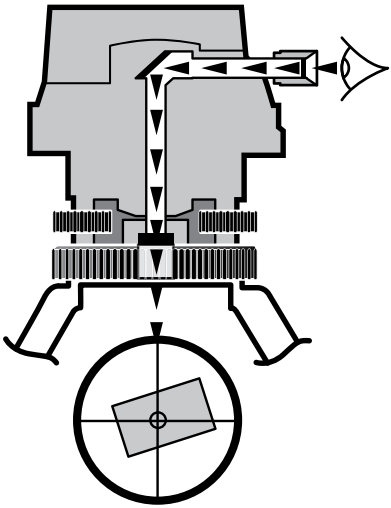

- Line up the tripod over the reference point.
- Remove the plumb bob hanger from the center stud of the tripod.
- Attach the instrument to the tripod.
- Level the instrument.

- Use the optical plummet to view the reference point on the ground. Sight through the optical plummet eyepiece **19** located beneath the telescope eyepiece.
- Turn the optical plummet eyepiece **19** to bring the crosshairs into focus.

NOTE: The image seen in the eyepiece is reversed left to right. This is important to remember when shifting the instrument or tripod to center over the reference point.

- Line up the crosshairs with the reference point.

If necessary, the instrument can be shifted by loosening the tripod center stud and sliding the instrument from side to side for proper positioning.

Optical Plummet Eyepiece

Positioning LT8-300LP Directly Over Point

To switch ON the laser plummet, press and release the ON switch **19**. A laser point will project through the center of the instrument to the reference point (a stake on the ground).

- Line up the tripod over the reference point.
- Remove the plumb bob hanger from the center stud of the tripod.
- Attach the instrument to the tripod.
- Level the instrument.
- Line up the laser point with the reference point.

Reference Point

If necessary, the instrument can be shifted by loosening the tripod center stud and sliding the instrument from side to side for proper positioning.

Leveling the Instrument

Set the instrument leveling screws.
Turn down the leveling screws until firm contact is made with the instrument base.

CAUTION **Do not overtighten the leveling screws.** It is very possible to overtighten the leveling screws. Only a firm contact between the screws and the base is necessary. If the instrument shifts on the base, turn down the screw more firmly by hand.

Leveling the instrument so the vial bubble remains centered through a 360° rotation of the telescope is the most important operation in preparing to use your instrument.

When leveling your instrument, be sure not to touch the tripod. Follow these instructions carefully.

Line up the telescope so that it is directly over one pair of leveling screws.

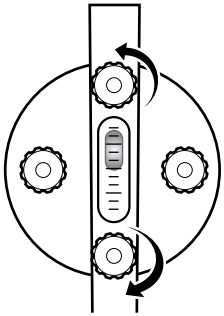

Grasp these two leveling screws with the thumb and forefinger of each hand.

Turn both screws at the same time by moving your thumbs toward each other or away from each other, until the bubble is centered.

When the bubble is centered, rotate the telescope 90 degrees over the second pair of leveling screws and repeat the thumbs in, thumbs out leveling procedure until the bubble is again centered.

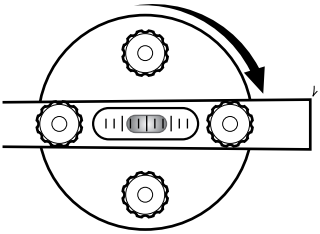

Shift back to the original position and check the level.

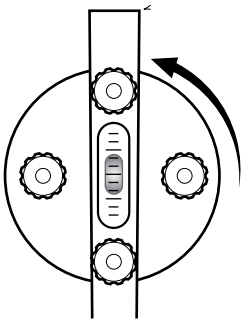

Make minor adjustments with leveling screws if necessary.

Final Level Check

Rotate the telescope over each of four leveling points to be sure the bubble remains centered.

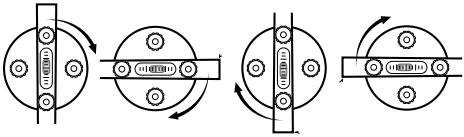

Rule for Quick and Simple Leveling

THUMBS IN, THUMBS OUT. Turn BOTH screws equally and simultaneously. Practice will help you get the feel of the screws and the movement of the bubble. It will also help to remember that the direction your left thumb moves is the direction the bubble will move.

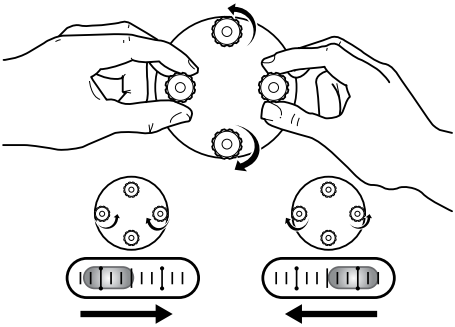

Reading the Circle, Arc, and Vernier

The 360° horizontal circle **6** is divided in quadrants (0 - 90°). The circle is marked in degrees and numbered every 10 degrees. The horizontal circle is referred to as the circle or degree scale. On level-transits, the vertical arc **14** also is a degree scale, and it is numbered every 10 degrees to 45 degrees, up and down.

For very precise readings, Universal instruments are equipped with a vernier **8** and **15** which divides each degree on the circle or arc into 12 equal parts of 5 minutes each. There are 60 minutes (60') in a degree.

The vernier scale **8 and 15** is read in the same direction (right or left) as you're reading the degree scale.

The following examples will explain how to read the degree and vernier scales on the circle and arc.

Exact Degree Reading

The point at which 0 on the vernier scale touches the circle**.** If the 0 coincides exactly with a degree line on the circle, your reading will be in exact degrees.

There are no fractions of degrees, or minutes, to be added to the reading. The horizontal circle reading is 40°.

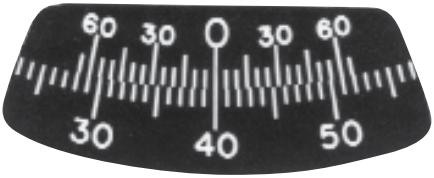

The vertical arc **14** is read in the same way. If the 0 on the vernier scale coincides exactly with a degree line on the arc, the reading will be in exact degrees.

Fraction (Minutes) Reading

If the 0 on the vernier does not coincide exactly with a degree line, your degree reading is the line which the 0 has just passed, reading up the degree scale, plus a fraction of the next degree.

To determine the fraction, or minutes:

- Start at 0 on the vernier and read up the vernier scale (in the same direction as you're reading the degree scale) until you find a minute line that coincides exactly with a degree line.

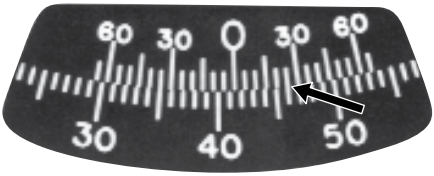

- 41° was the last degree line passed on the circle.

  Reading to the right on the vernier scale, the minute line which coincides exactly with a degree line is 25' (Reading is 41° 25').

Remember, each line on the vernier scale represents 5', so you will be reading 5', 10', etc. The circle degree scale is being read to the left.

When reading the circle degree scale to the left, read up the vernier scale in the same direction.

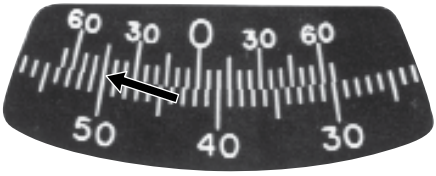

- Reading to the left on the vernier scale **8**, the minute line which coincides exactly with a degree line is 45'.

The vertical arc **14** is read in the same way. 21° was the last degree line passed (when reading the arc degree scale to the right).

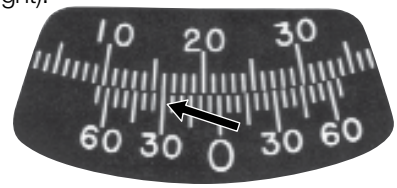

- Reading to the right on the vernier scale, the minute line which coincides exactly with a degree is 30'.

Sighting and Focusing the Telescope

The telescope **1** provides a sharp image magnified 26 times. This means the object sighted appears 26 times closer than it would with the naked eye.

Avoid touching the tripod while sighting.

- Aim the telescope at the object and sight first through the notches **2** on the top of the level vial for preliminary sighting. Look through the telescope eyepiece **3** and focus the crosshairs using the eyepiece adjuster **3**.
- Then bring the object into focus using the focusing knob **4**.
- Rotate the instrument until the crosshairs are positioned on or near the target. Tighten the horizontal clamp **9** and make final settings with the tangent fine tuning knob **10** to bring the crosshairs exactly on point.

When sighting through the telescope, keep both eyes open. You will find that this eliminates squinting, will not tire your eyes and gives the best view through the telescope.

Remember to avoid touching the tripod while sighting.

Stadia Reticle.

All LT8-300 series instruments have a glass stadia reticle with two additional horizontal lines for use in determining distance.

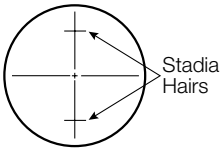

Read the length "ℓ" of a level rod shown between the stadia hairs.

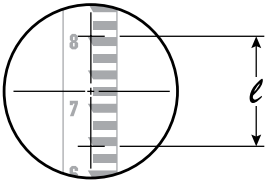

The distance to the target is “ℓ” multiplied by 100. The distance between point A and point B is L.

L = 100 x “ℓ”

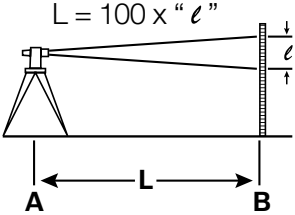

Removing the instrument from the tripod

Unscrew the instrument base **18** from the tripod head and remove the instrument from the tripod. When storing in the carrying case, disengage both lock levers **11** and loosen the vertical clamp **12**. Place instrument in case with lock levers **11** facing down and focus knob **4** facing up.

MAINTENANCE AND SERVICE

Store and transport the tool only in the supplied protective case.

Keep the tool clean at all times.

Do not immerse the tool into water or other fluids.

Wipe off debris using a moist and soft cloth. Do not use any cleaning agents or solvents.

Regularly clean the surfaces at the exit opening of the laser in particular, and pay attention to any fluff of fibers.

If the tool should fail despite the care taken in manufacturing and testing procedures, repair should be carried out by an authorized after-sales service center for Dave White's SitePro instruments.
In all correspondence and spare parts orders, please always include the model number and serial number of the instruments.

All precision instruments should be cleaned, lubricated, checked and adjusted ONLY at a qualified instrument repair station or by the manufacturer, at least once a year.

In case of repairs, send in the instrument packed in its protective case.

ENVIRONMENT PROTECTION

Recycle raw materials & batteries instead of disposing of waste. The unit, accessories, packaging & used batteries should be sorted for environmentally friendly recycling in accordance with the latest regulations.

LIMITED WARRANTY

Dave White's SitePro ("Seller") warrants to the original purchaser only, that all David White laser tools and optical instruments will be free from defects in material or workmanship for a period of two (2) years from date of purchase.

SELLER'S SOLE OBLIGATION AND YOUR EXCLUSIVE REMEDY under this Limited Warranty and, to the extent permitted by law, any warranty or condition implied by law, shall be the repair or replacement of parts, without charge, which are defective in material or workmanship and which have not been misused, carelessly handled, or misrepaired by persons other than Seller or Authorized Service Center. To make a claim under this Limited Warranty, you must return the complete laser, optical instrument or David White product, transportation prepaid, to SITEPRO Service Department or Authorized Service Center. Please include a dated proof of purchase with your tool. For locations of nearby service centers, please call 1-855-354-9881.

THIS LIMITED WARRANTY DOES NOT APPLY TO ACCESSORY ITEMS SUCH AS TRIPODS, RODS, HAND LEVELS, FIELD SUPPLIES, TAPES, MOUNTING DEVICES AND OTHER RELATED ITEMS. THESE ITEMS RECEIVE A 90 DAY LIMITED WARRANTY.

To make a claim under this Limited Warranty, you must return the complete product, transportation prepaid. For details to make a claim under this Limited Warranty please visit www.davidwhite.com or call 1-855-354-9881.

ANY IMPLIED WARRANTIES SHALL BE LIMITED IN DURATION TO ONE YEAR FROM DATE OF PURCHASE. SOME STATES IN THE U.S., AND SOME CANADIAN PROVINCES DO NOT ALLOW LIMITATIONS ON HOW LONG AN IMPLIED WARRANTY LASTS, SO THE ABOVE LIMITATION MAY NOT APPLY TO YOU.

IN NO EVENT SHALL SELLER BE LIABLE FOR ANY INCIDENTAL OR CONSEQUENTIAL DAMAGES (INCLUDING BUT NOT LIMITED TO LIABILITY FOR LOSS OF PROFITS) ARISING FROM THE SALE OR USE OF THIS PRODUCT. SOME STATES IN THE U.S., AND SOME CANADIAN PROVINCES DO NOT ALLOW THE EXCLUSION OR LIMITATION OF INCIDENTAL OR CONSEQUENTIAL DAMAGES, SO THE ABOVE LIMITATION MAY NOT APPLY TO YOU.

THIS LIMITED WARRANTY GIVES YOU SPECIFIC LEGAL RIGHTS, AND YOU MAY ALSO HAVE OTHER RIGHTS WHICH VARY FROM STATE TO STATE IN THE U.S., OR PROVINCE TO PROVINCE IN CANADA AND FROM COUNTRY TO COUNTRY.

THIS LIMITED WARRANTY APPLIES ONLY TO PRODUCTS SOLD WITHIN THE UNITED STATES OF AMERICA, CANADA AND THE COMMONWEALTH OF PUERTO RICO. FOR WARRANTY COVERAGE WITHIN OTHER COUNTRIES, CONTACT YOUR LOCAL SITEPRO DEALER OR IMPORTER.

David White is a registered trademark and distributed exclusively by SitePro.

© Dave White's SitePro 7619 S 1150 E Otterbein, IN 47970
Tel. +1 (765) 581 4097

42346D8870 09/15 Printed in China

CONTRACTORS-TOOLS.COM

SURVEY EQUIPMENT AND SUPPLIES

AUTHORIZED DAVID WHITE DEALER

Need one, or need a hand with yours?

We sell, ship and support these every week.

CALL	**1-877-866-5721**
WEB	**Contractors-Tools.com**
PRODUCT	**LT8-300, LT8-300P and LT8-300LP universal le**
PART #	**46-D8871 / 46-D8872**

- Family owned and operated | Free shipping | Same-day shipping
- Real people who set these up - not a call centre

Experience the value of Great Customer Service!

Contractors-Tools.com | 1-877-866-5721